HEATER & AIR CONDITIONER

SECTION HA

CONTENTS

GENERAL DESCRIPTION . . . . . HA- 2
AIR FLOW AND COMPONENT LAYOUT . . . . . HA- 3
LOCATION OF VACUUM COMPONENTS . . . . HA- 5
DOOR CONTROL . . . . . HA- 6

HEATER ELECTRICAL CIRCUIT . . . . . HA- 7

DESCRIPTION-Air Conditioner (Manual) . . . . . HA- 9
DISCHARGING, EVACUATING, CHARGING AND CHECKING . HA-12
A/C PERFORMANCE TEST HA-18
PRECAUTIONS FOR REFRIGERANT CONNECTION HA-20
PIPING, COMPRESSOR MOUNTING AND F.I.C.D. . HA-21
COMPRESSOR OIL-For MJS170 . . . . . HA-23
COMPRESSOR-Model MJS170 . . . . . HA-25
A/C ELECTRICAL CIRCUIT (Manual) HA-30
A/C ELECTRICAL COMPONENTS (Manual) HA-32
LOCATION OF A/C ELECTRICAL COMPONENTS HA-34
SERVICE DATA AND SPECIFICATIONS (S.D.S.) HA-35
SPECIAL SERVICE TOOLS HA-38

FIND

HA

Continuously Variable Air Flow Control

The fan control amplifier, which utilizes transistor circuits, continuously controls the air flow blown out by the blower, allowing for selection of the desired air flowrate. The fan control amplifier is housed in the blower motor unit. The heat-radiating plate of the amplifier is placed in the stream of the air flow to effectively cool the transistors

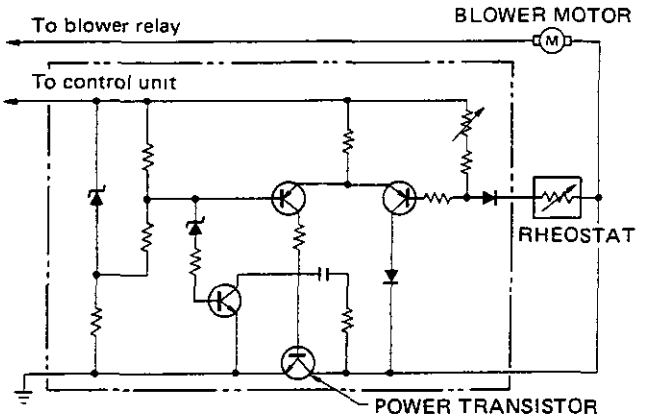

FAN CONTROL AMPLIFIER

SHA255B

Device for Distributing Cool Air to the Feet during "FACE MODE"

A vacuum actuator is used in the cool-air distribution device to remove the hot air directed to the floor area and distribute the optimum air temperature to the driver's compartment When the vacuum switch is turned "ON", part of the outside air (or part of the cool air on models equipped with air conditioning systems) taken in the vehicle is bypassed to the shower duct on the driver's side through the operation of the actuator

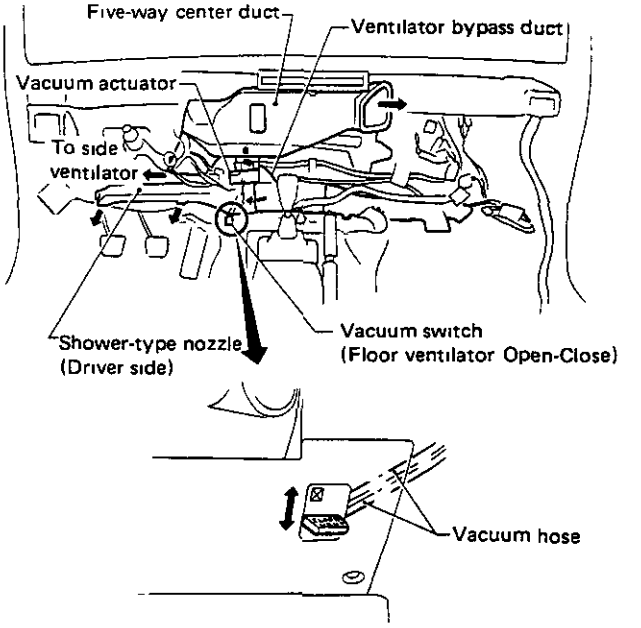

SHA230B

Air Flow

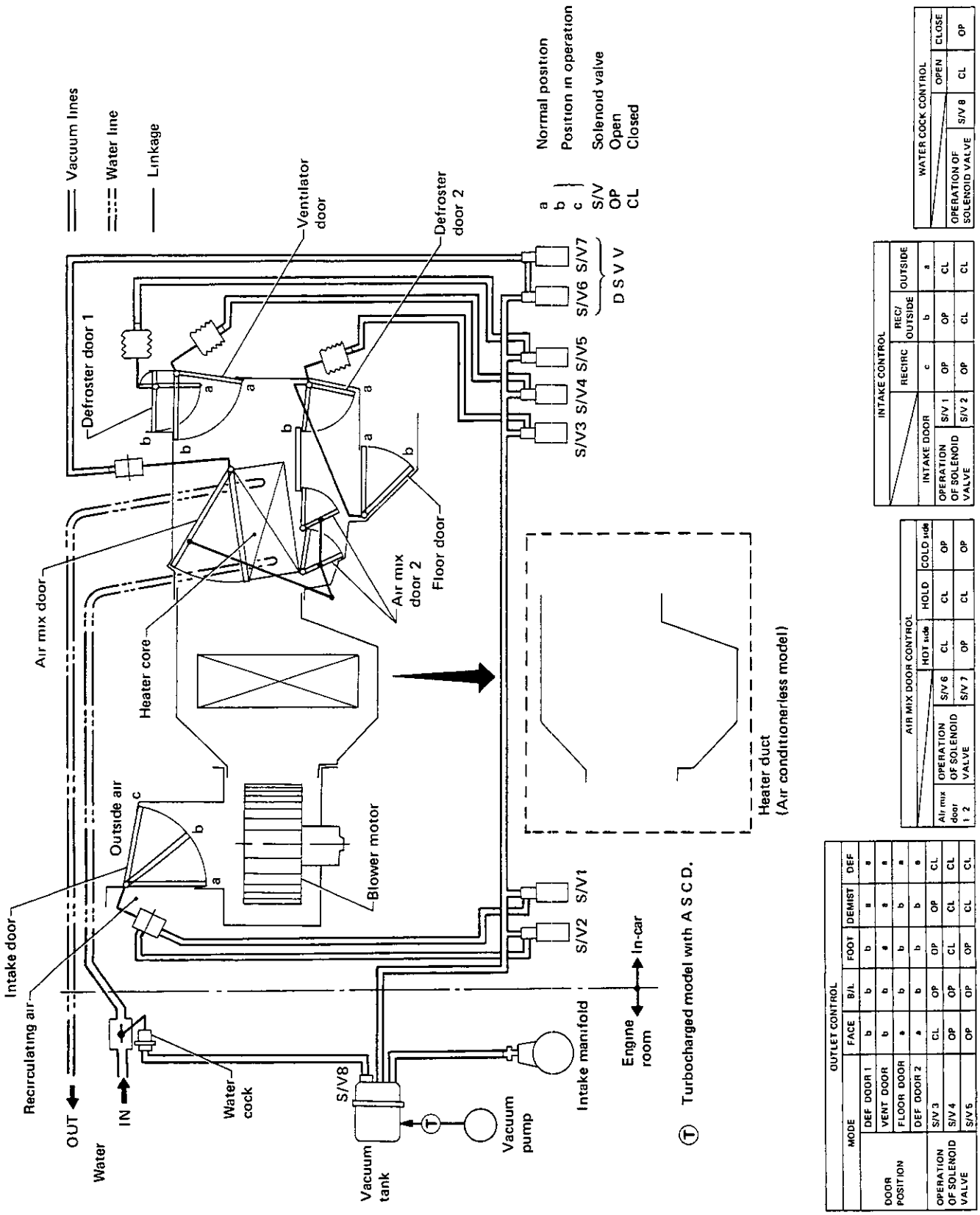

OUTLET CONTROL							
MODE		FACE	B/L	FOOT	DEMIST	DEF
DOOR POSITION	DEF DOOR 1	b	b	b	a	a
	VENT DOOR	b	b	a	a	a
	FLOOR DOOR	a	b	b	b	a
	DEF DOOR 2	a	b	b	b	a
OPERATION OF SOLENOID VALVE	S/V 3	CL	OP	OP	OP	CL
	S/V 4	OP	OP	CL	CL	CL
	S/V 5	OP	OP	OP	CL	CL

AIR MIX DOOR CONTROL			
		HOT side	HOLD	COLD side
Air mix door 1, 2	OPERATION OF SOLENOID VALVE	S/V 6	CL	CL	OP
		S/V 7	OP	CL	OP

INTAKE CONTROL				
		RECIRC	REC/ OUTSIDE	OUTSIDE
INTAKE DOOR		c	b	a
OPERATION OF SOLENOID VALVE	S/V 1	OP	OP	CL
	S/V 2	OP	CL	CL

WATER COCK CONTROL			
		OPEN	CLOSE
OPERATION OF SOLENOID VALVE	S/V 8	CL	OP

SHA231B

AIR FLOW AND COMPONENT LAYOUT

Component Layout

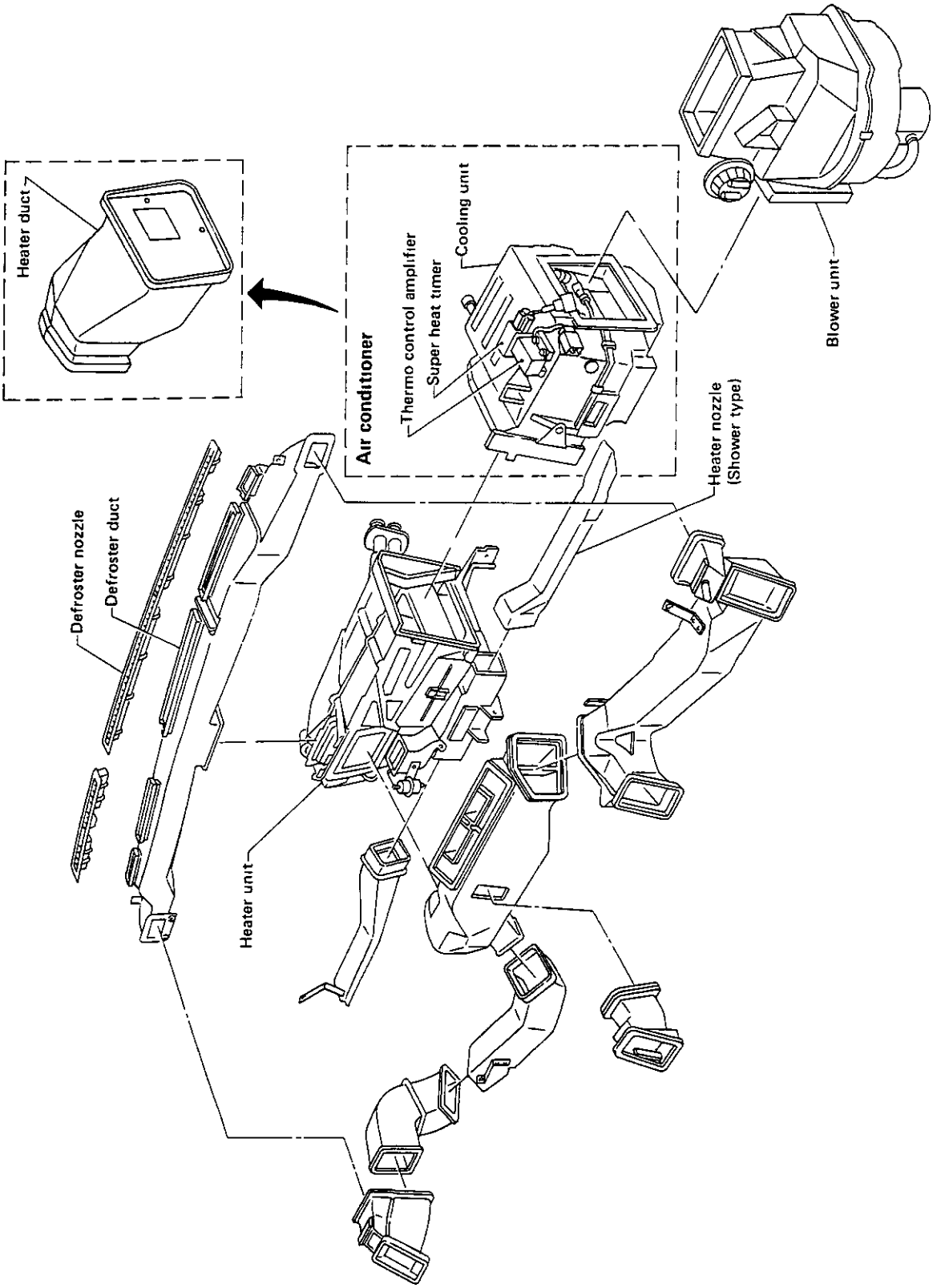

SHA232B

LOCATION OF VACUUM COMPONENTS

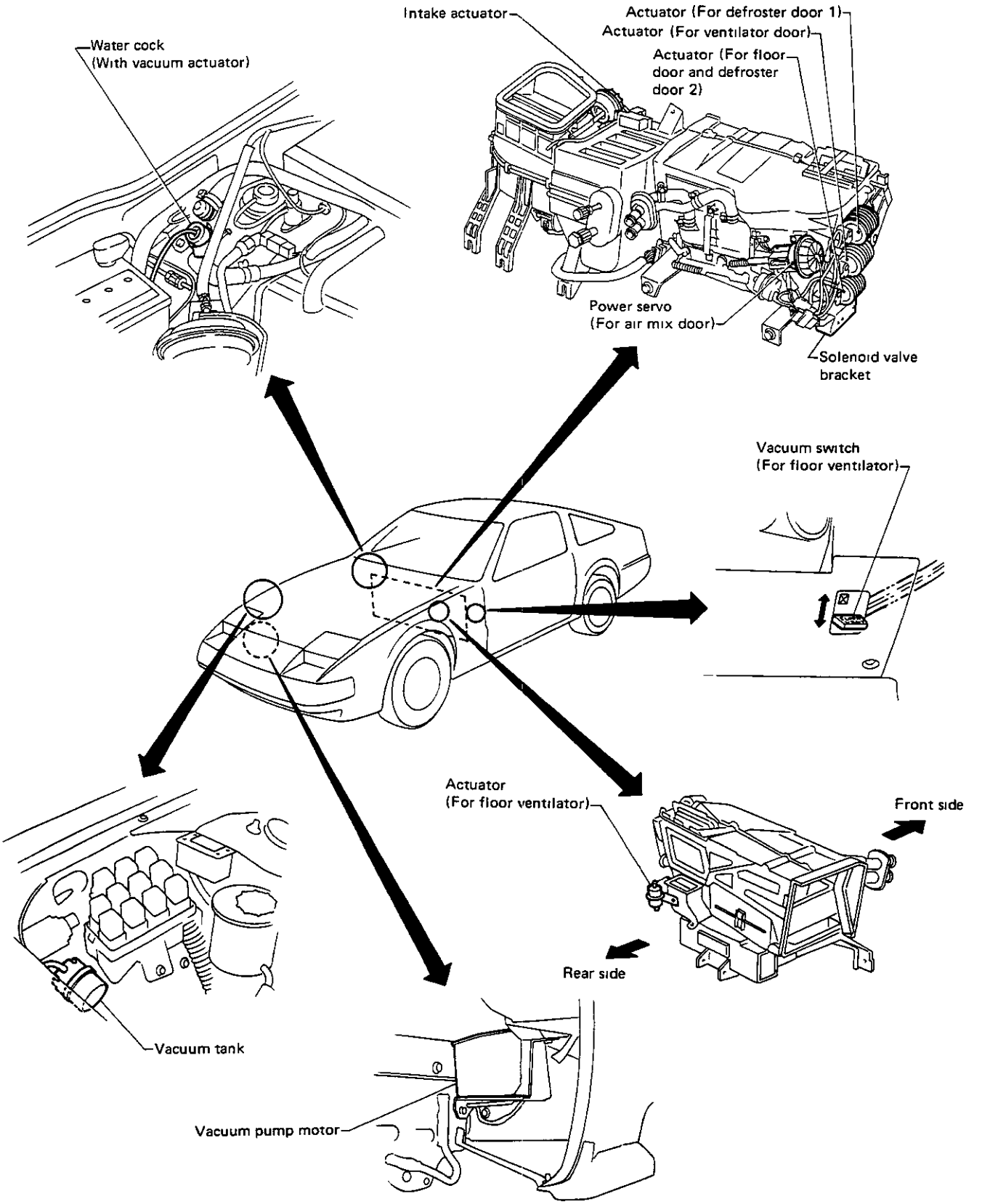

SHA233B

Heater and Air Conditioner Control Removal

PROCEDURES

Remove each screw in the number order shown in the following illustration.

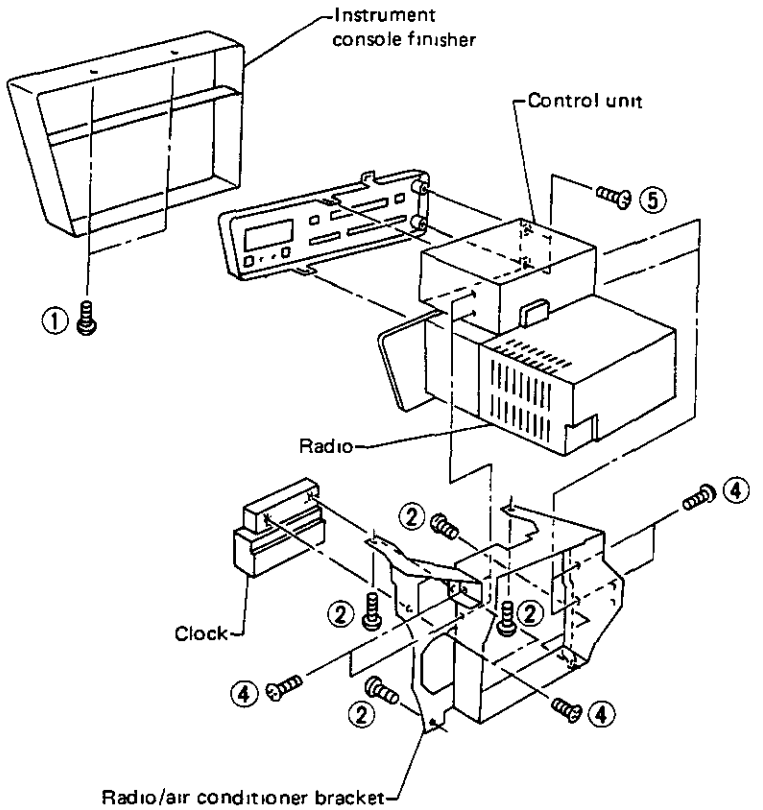

SHA234B

HEATER ELECTRICAL CIRCUIT

Schematic

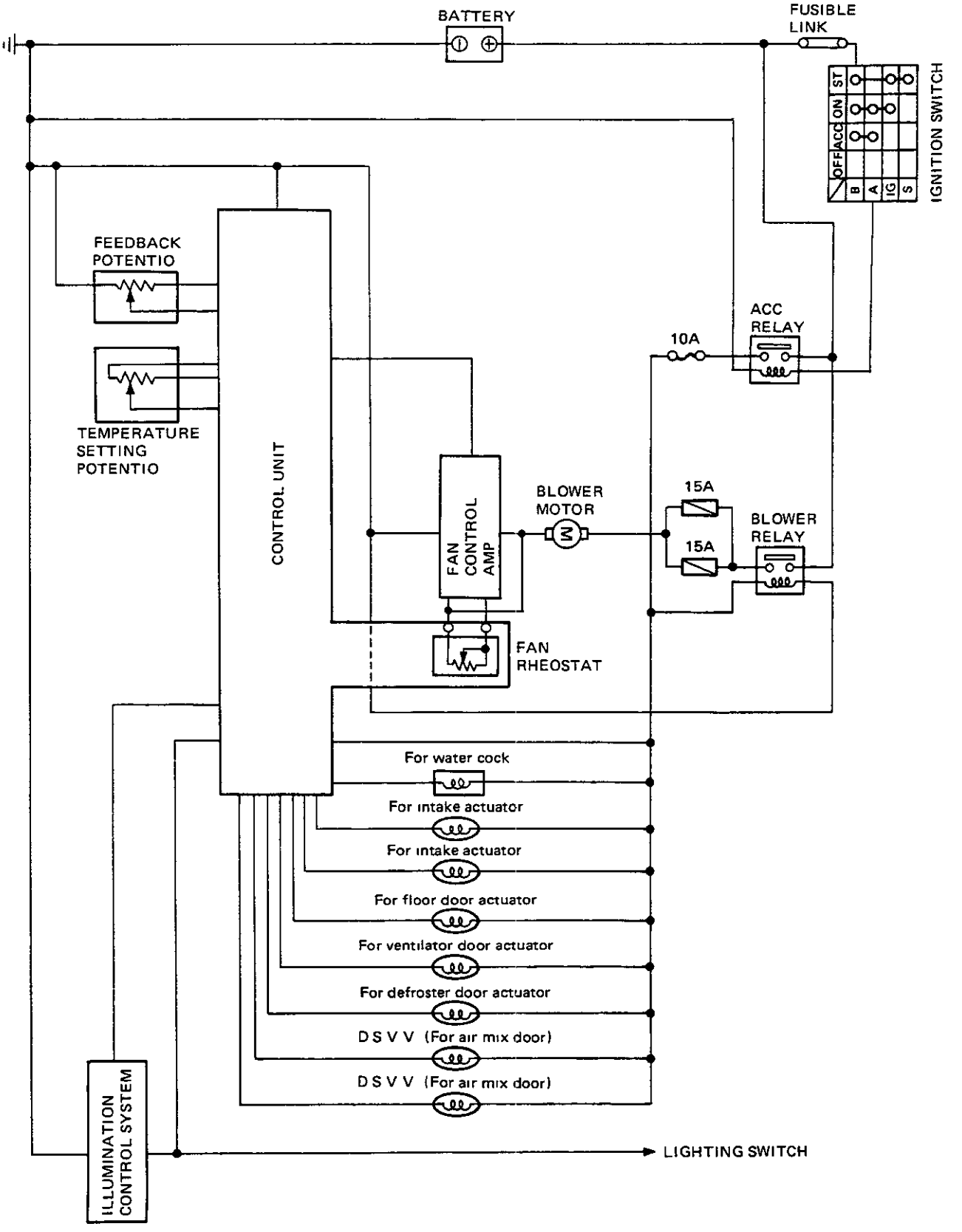

SHA236B

HEATER ELECTRICAL CIRCUIT

Wiring Diagram

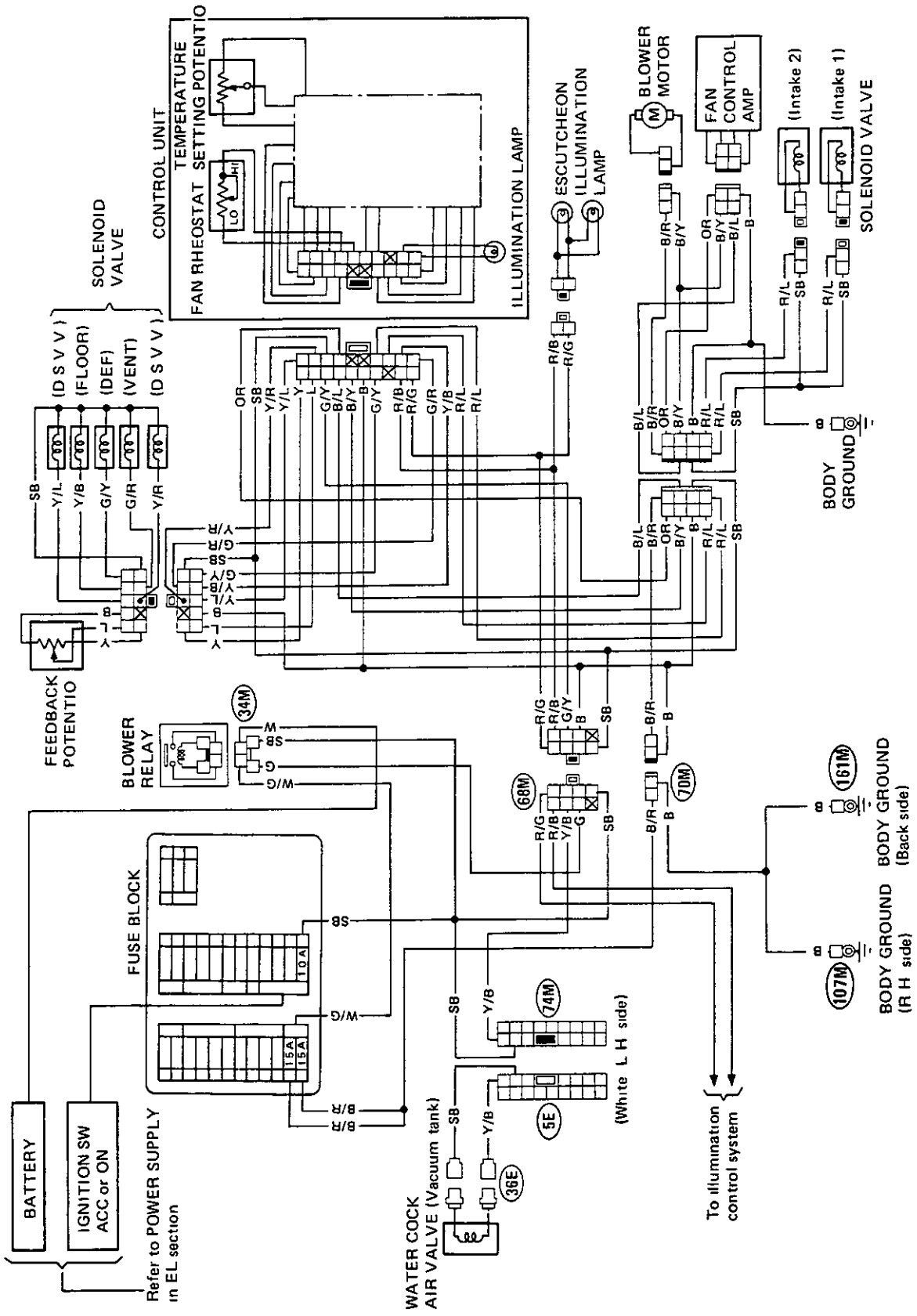

Refrigeration Cycle

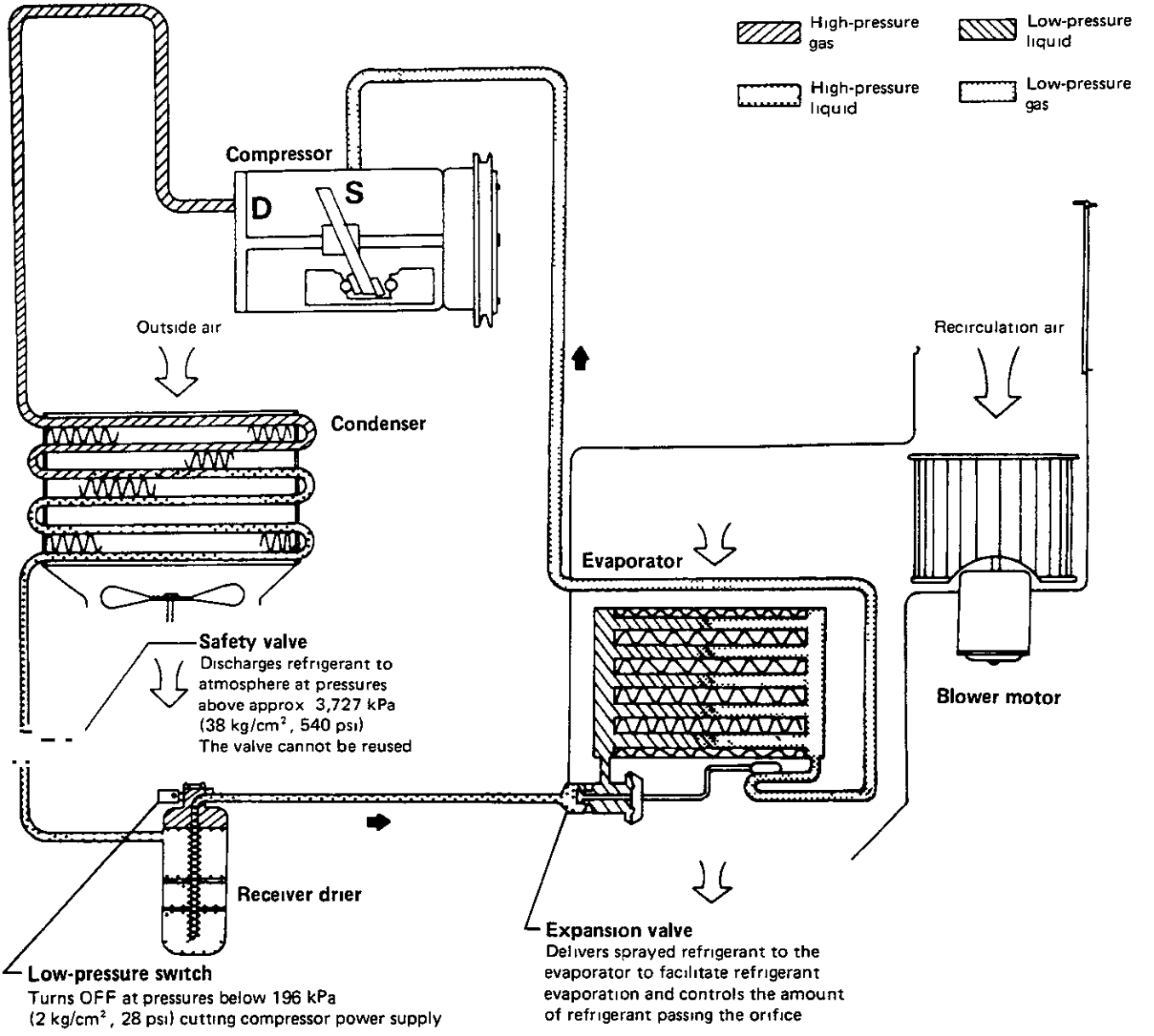

SHA238B

Refrigerant Leak Warning System

The refrigerant leak warning system, used in conjunction with the low-pressure switch, protects the cooler cycle from damage due to continued operation of the air conditioning system when there is a shortage of refrigerant It also indicates when to replenish the refrigerant

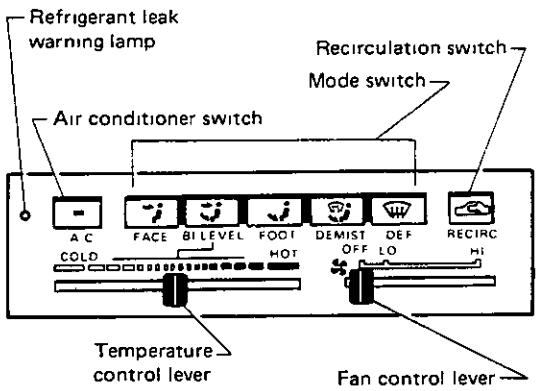

SHA227B

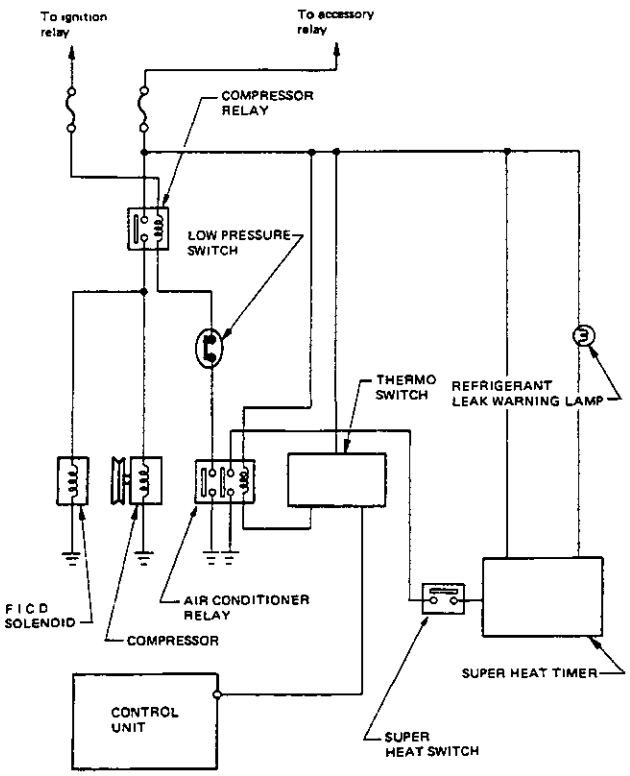

SHA228B

When the refrigerant in the cooler cycle is insufficient, it vaporizes quickly inside the evaporator As a result, the "super heat" of the refrigerant at the outlet of the evaporator increases If it exceeds the specified level [Approximately 45°C (81°F)], the super heat switch turns on, allowing the current to flow through the timer If current continues to flow through the timer for the specified length of time, the timer activates to close the contacts which turn on the warning lamp

Leak warning lamp check

Conduct a continuity test in the leak warning lamp circuit.

1) Turn ignition switch "ON" (with engine off) to make sure warning lamp illuminates.
2) Start engine. Warning lamp should go out if the amount of refrigerant is sufficient.

EXPLANATION OF SUPER HEAT

When a liquid under constant pressure inside a cylinder is heated, it apparently changes in three different states The relationship between the temperature of the liquid (refrigerant) and its volume, which uses the pressure as a parameter, is shown in the graph below.

1) The temperature of the liquid rises along the saturated liquid line (a → b or a → b')
2) When the temperature of the liquid reaches a certain level, evaporating bubbles quickly appear This mixture of liquid and vapor continues to take place, during which the temperature remains constant until the last droplet of liquid vaporizes. Points c and c' where the entire liquid vaporizes, are located on the saturated vapor line (b → c or b' → c').
3) When the liquid is further heated, the temperature of the vapor rises again and its volume also increases. The volume will continue to increase as the temperature is increased
   We call this vapor "super heated vapor" (c → d or c' → d')
   The line between points c and c' is called the "saturated vapor line."

Refrigerant Leak Warning System (Cont'd)

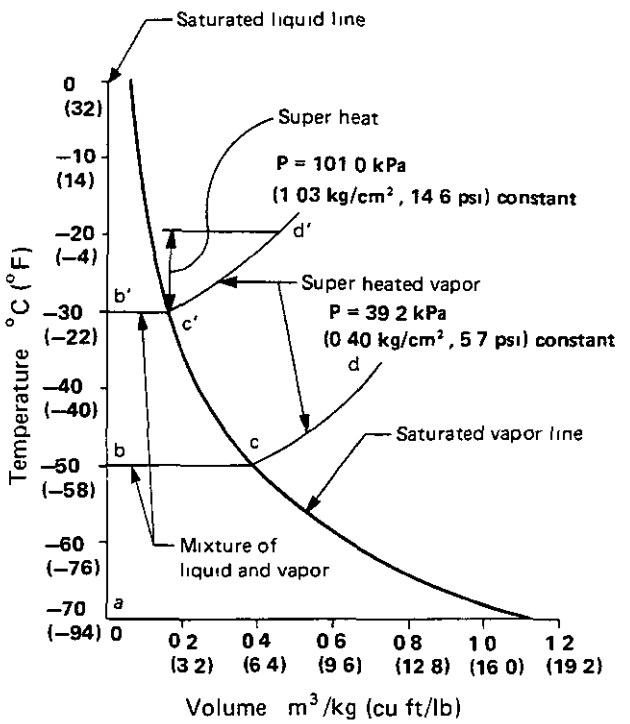

Relation between temperature and volume (Refrigerant R-12)

SHA239B

Definition

The super heat is the difference between the temperature of an optional super heated vapor point and the saturated temperature point (which is located on the saturated vapor line) under the same pressure as for the former point

SUPER HEAT SWITCH

The super heat switch, placed, in the refrigerant line at the outlet of the evaporator, consists of a diaphragm, temperature sensor, moving contact (A) and fixed contact (B) The diaphragm detects the refrigerant line pressure and the temperature sensor senses the refrigerant line temperature.

When the temperature in the refrigerant line increases, the gas charged inside the temperature sensor expands This causes a force to move the diaphragm upward against the refrigerant line pressure When the difference between the saturated temperature and the detected temperature in relation to the detected pressure reaches a specified condition, the adjusting screw is pushed up by the diaphragm This then causes moving contact point (A) to move down so that the super heat switch turns "ON"

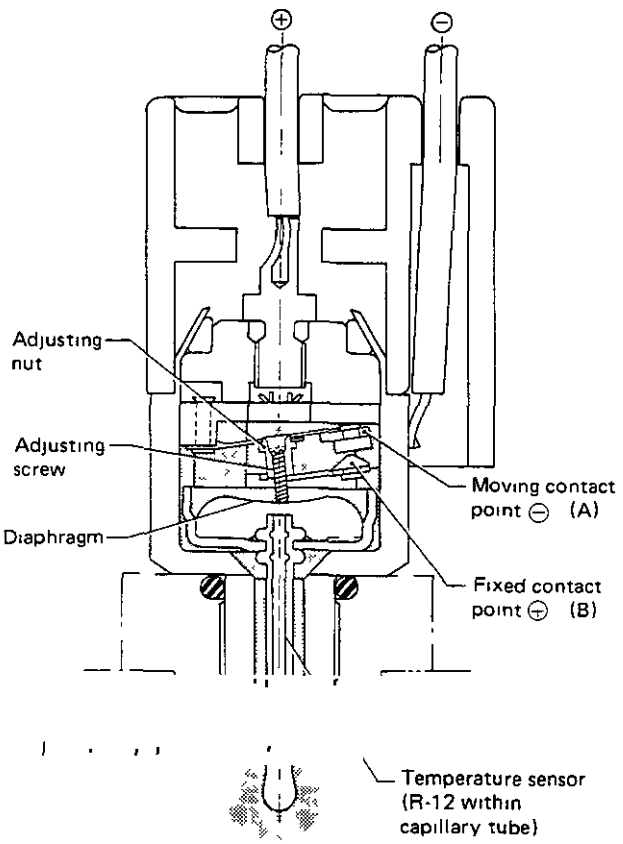

SHA229B

SUPER HEAT TIMER

During rapid acceleration, the "super heat" increases momentarily and returns to its original level quickly even when the amount of the refrigerant is normal. Because of this, a timer, used in the warning system, detects an increase in "super heat" only when the amount of refrigerant is low, thereby preventing erroneous alarms

Precautions

WARNING:

- Always be careful that refrigerant does not come in contact with your skin.
- Always wear eye protection when working around the system
- Keep refrigerant containers stored below 50°C (122°F) and never drop it from a high place
- Work in well-ventilated area because refrigerant gas evaporates quickly and breathing may become difficult due to the lack of oxygen
- Keep refrigerant away from open flames because poisonous gas will be produced if it is burns.
- Do not use steam to clean surface of condenser or evaporator Be sure to use cold water or compressed air.
- Compressed air must never be used to clean a dirty line Clean with refrigerant gas
- Do not use manifold gauge whose press point shape is different Otherwise, insufficient evacuating may occur

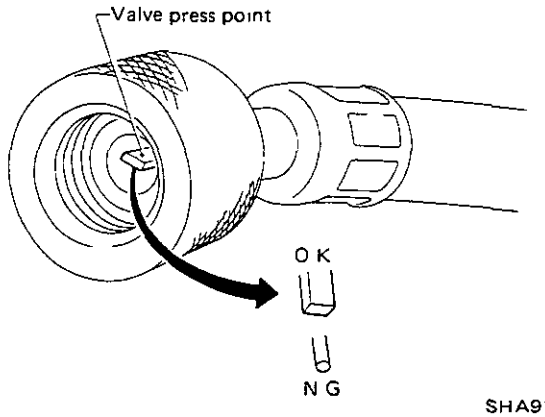

SHA919A

- Do not over-tighten service valve cap.
- Do not allow refrigerant to rush out. Otherwise, compressor oil will be discharged along with refrigerant

Discharging

Slowly open the valves to discharge only refrigerant If they are opened quickly, compressor oil will also be discharged

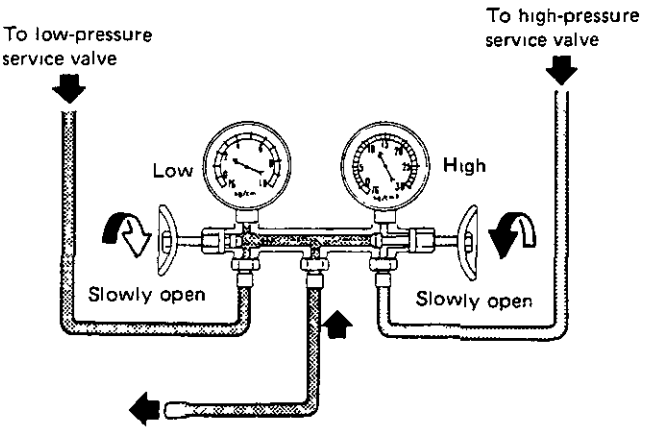

SHA240B

Evacuating The System

1. Start pump, then open both valves and run pump for about 20 minutes

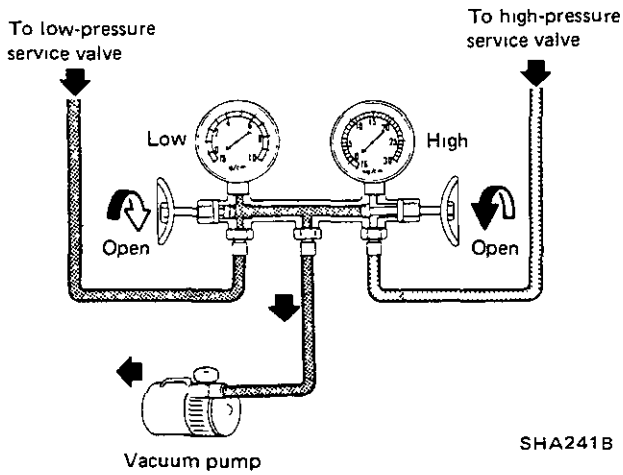

2. When low gauge has reached approx 101 3 kPa (760 mmHg, 29 92 inHg), completely close both valves of gauge and stop vacuum pump Let it stand for 5 to 10 minutes in this state and confirm that the reading does not rise.

a. **The low-pressure gauge reads lower by 3.3 kPa (25 mmHg, 0.98 inHg) per 300 m (1,000 ft) elevation Perform evacuation according to the following table.**

Elevation m (ft)	Vacuum of system* kPa (mmHg, inHg)
0 (0)	101 3 (760, 29 92)
300 (1,000)	98 0 (735, 28 94)
600 (2,000)	94 6 (710, 27 95)
900 (3,000)	91 3 (685, 26 97)

* Values show reading of the low-pressure gauge

b. **The rate of ascension of the low-pressure gauge should be less than 3.3 kPa (25 mmHg, 0.98 inHg) in five minutes.**

Charging

1 Evacuate refrigerant system

2 *Close manifold gauge valves securely and disconnect charging hose from vacuum pump*

3 Purge air from center charging hose

1) Connect center charging hose to refrigerant can through can top

2) Break seal of refrigerant can and purge air

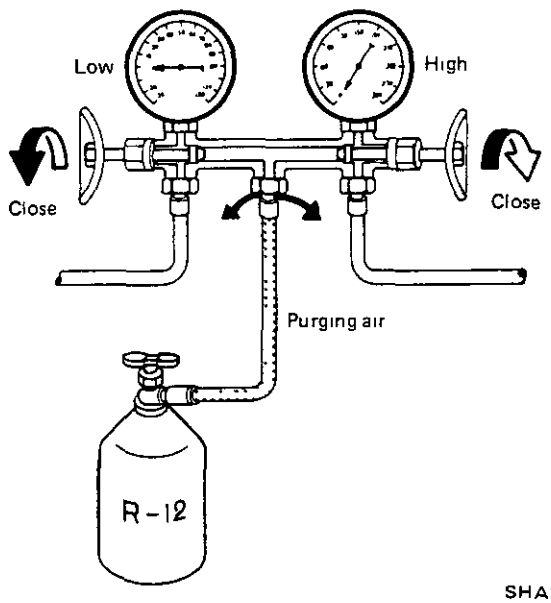

4 Charge refrigerant into system

WARNING:

Ensure that engine is off.

1) Open high- and low-pressure valves of manifold gauge and charge refrigerant into system

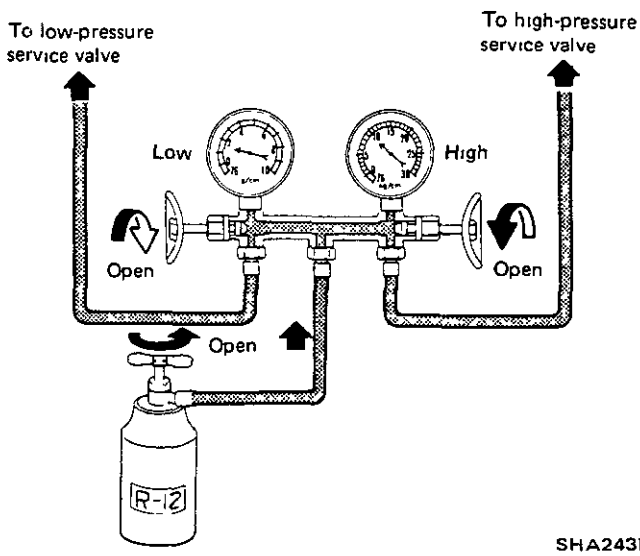

2) Quick charging

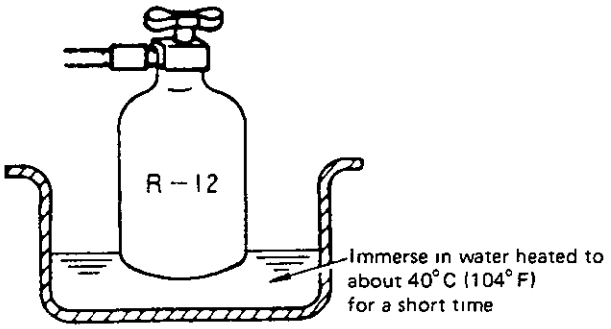

AC184A

CAUTION:

If charging liquefied refrigerant into the system with the can turned upside down to reduce charging time, charge it only through high pressure (discharge) service valve. After charging, the compressor should always be turned several times manually.

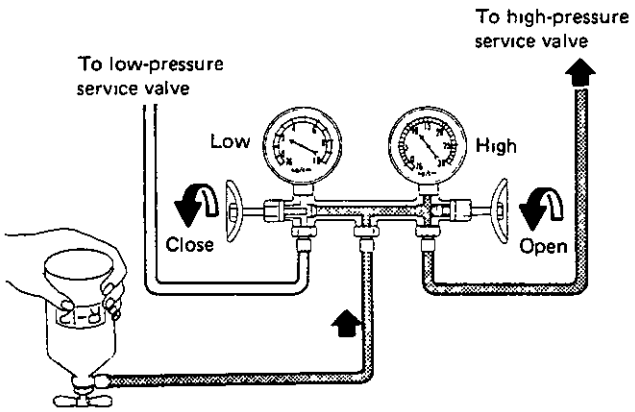

SHA244B

5. When refrigerant charging speed slows down, charge it while running the compressor for ease of charging

WARNING:

Never charge refrigerant through high pressure side (discharge side) of system since this will force refrigerant back into refrigerant can and can may explode.

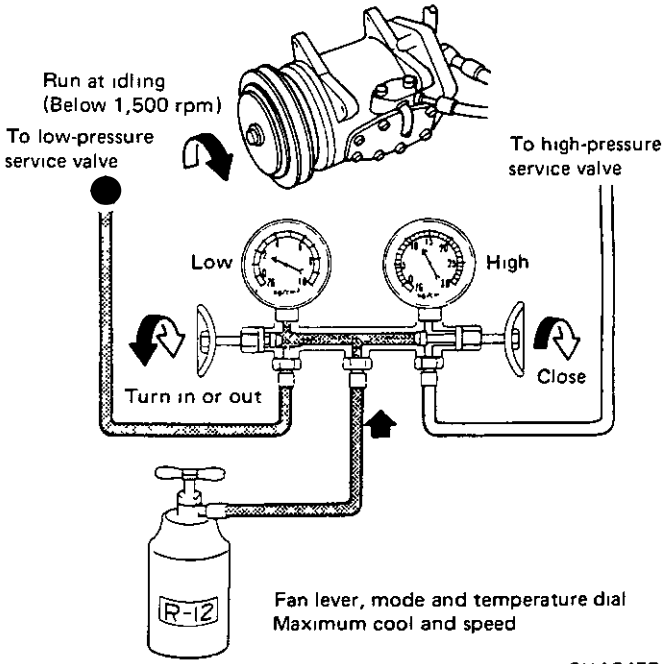

SHA245B

6 Charge refrigerant while controlling low-pressure gauge reading at 275 kPa (2.8 kg/cm², 40 psi) or less by turning in or out low-pressure valve of manifold gauge.

- **Be sure to purge air from charging hose when replacing can with a new one.**

7 Charge the specified amount of refrigerant into system by weighing charged refrigerant with scale. Overcharging will cause discharge pressure to rise.

Refrigerant amount:

MJS170

0.9 - 1.1 kg (2.0 - 2.4 lb)

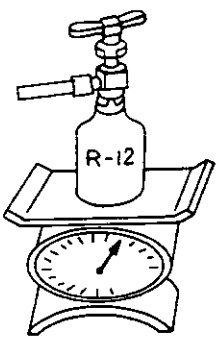

SHA900A

Charging (Cont'd)

The state of the bubbles in sight glass should only be used for checking whether the amount of charged refrigerant is small or not The amount of charged refrigerant can be correctly judged by means of discharge pressure.

8 After charging, be sure to install valve cap on service valve

9 Confirm that there are no leaks in system by checking with a leak detector

Checking Refrigerant Level

CONDITION

- *Door window* Open
- A/C switch ON
- TEMP lever position Max COLD
- FAN lever position Maximum speed
- Check sight glass after a lapse of about five minutes

Check item \ Amount of refrigerant	Almost no refrigerant	Insufficient	Suitable	Too much refrigerant
Temperature of high pressure and low pressure lines	Almost no difference between high pressure and low pressure side temperature	High pressure side is warm and low pressure side is fairly cold	High pressure side is hot and low pressure side is cold	High pressure side is ab normally hot
State in sight glass	Bubbles flow continu ously **Bubbles will disappear and something like mist will flow when refrigerant is nearly gone**	The bubbles are seen at intervals of 1 - 2 seconds	Almost transparent Bubbles may appear when engine speed is raised and lowered	No bubbles can be seen
			No clear difference exists between these two conditions	
Pressure of system	High pressure side is abnormally low	Both pressure on high and low pressure sides are slightly low	Both pressures on high and low pressure sides are normal	Both pressures on high and low pressure sides are abnormally high
Repair	**Stop compressor immediately** and conduct an overall check	Check for gas leakage repair as required, replenish and charge system		Discharge refrigerant from service valve of low pressure side

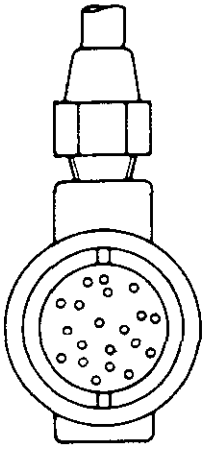

AC256

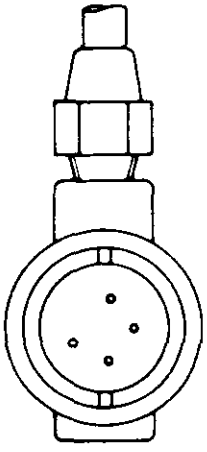

AC257

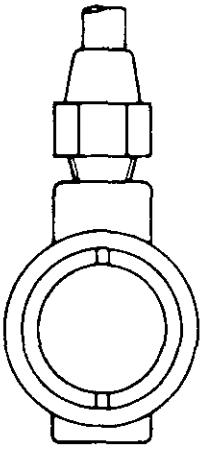

AC258

a. **The bubbles seen through the sight glass are influenced by the ambient temperature. Since the bubbles are hard to show up in comparatively low temperatures below 20°C (68°F), it is possible that a slightly larger amount of refrigerant would be filled, if supplied according to the sight glass. Be sure to recheck the amount when it exceeds 20°C (68°F). In higher temperature the bubbles are easy to show up.**

b. **When the screen in the receiver drier is clogged, the bubbles will appear even if the amount of refrigerant is normal In this case, the outlet side pipe of the receiver drier becomes considerably cold.**

Checking Refrigerant Leaks

ELECTRIC LEAK-DETECTOR

The leak detector is a delicate device that detects small amounts of halogen

In order to use the device properly, read the manuals put out by each maker and perform the specified maintenance and inspections

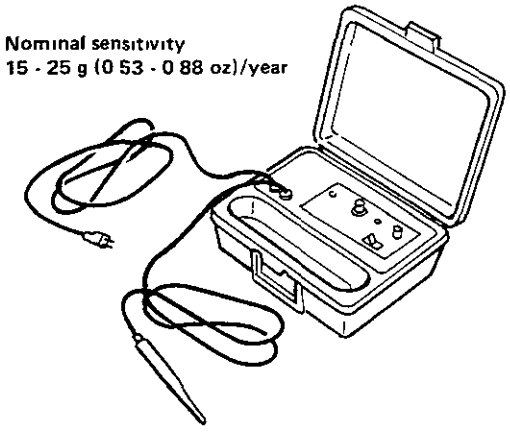

SHA733A

GENERAL PRECAUTIONS FOR HANDLING LEAK DETECTOR

1 Each fitting must be checked around its entire periphery

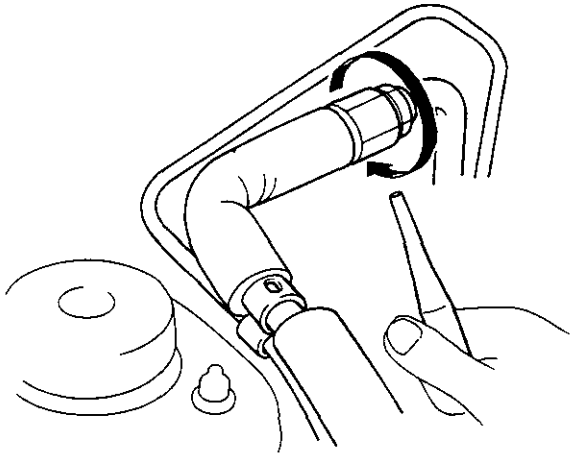

SHA734A

2 Move probe close to and 3 mm (0 12 in) away from the point to be checked

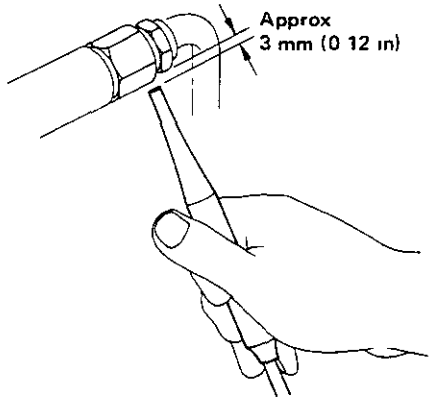

SHA735A

3 The moving speed of the probe must be maintained at less than 3 cm (1 2 in)/sec

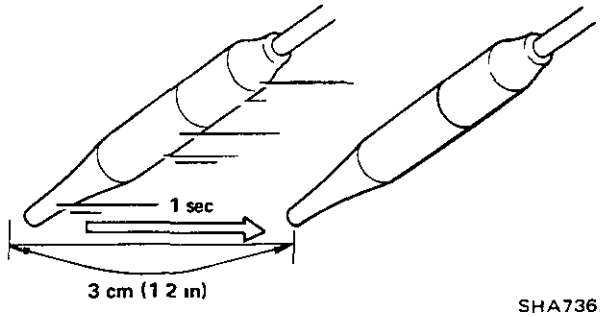

SHA736A

MEASUREMENT STANDARD

If any reaction is noted using a detector having a nominal sensitivity of 15 to 25 g (0.53 to 0.88 oz)/year, that portion checked be found as leaking, and therefore must be repaired.

- *Oil deposited during assembling must be wiped off before inspection*
- If any trace of oil is noted at and around connection fittings, it is a sure indication that refrigerant is leaking
- **When the gas leaking point is found, disconnect that line and replace the O-ring. Check seal seat for fit for further use and then tighten connections to the specified torque.**
- **Do not overtighten.**

A/C PERFORMANCE TEST

Performance Chart

TEST CONDITION

Testing must be performed as follows

Vehicle location	Indoors or in the shade (in a well ventilated place)
Doors	Closed
Door window	Open
Hood	Open
TEMP lever position	Max COLD
Mode switch position	(Face)
Recirculation switch position	RECIRC ON
FAN speed	MAX HI
Engine speed·	1,500 rpm
Time required before starting testing after air conditioner starts operating	More than 10 minutes

TEST READING

Recirculating-to-discharge air temperature table

Inside air (Recirculating air) at blower assembly inlet		Discharge air temperature at center ventilator °C (°F)
Relative humidity %	At temperature °C (°F)	
50 - 60	20 (68)	4 5 - 5 0 (40 - 41)
	25 (77)	8 6 - 9 5 (47 - 49)
	30 (86)	12 7 - 14 1 (55 - 57)
	35 (95)	16 7 - 18 6 (62 - 65)
	40 (104)	20 8 - 23 1 (69 - 74)
60 - 70	20 (68)	5 0 - 5 5 (41 - 42)
	25 (77)	9 5 - 10 5 (49 - 51)
	30 (86)	14 1 - 15 5 (57 - 60)
	35 (95)	18 6 - 20 5 (65 - 69)
	40 (104)	23 1 - 25 4 (74 - 78)

Performance Chart (Cont'd)

Ambient air temperature to compressor pressure table

Ambient air		High pressure (Discharge side) kPa (kg/cm^2, psi)	Low pressure (Suction side) kPa (kg/cm^2, psi)
Relative humidity %	Air temperature °C (°F)		
50 - 70	20 (68)	853 - 1,049 (8 7 - 10 7, 124 - 152)	59 - 78 (0 6 - 0 8, 9 - 11)
	25 (77)	1,040 - 1,275 (10 6 - 13 0, 151 - 185)	88 - 108 (0 9 - 1 1, 13 - 16)
	30 (86)	1,216 - 1,491 (12 4 - 15 2, 176 - 216)	108 - 137 (1 1 - 1 4, 16 - 20)
	35 (95)	1,393 - 1,706 (14 2 - 17 4, 202 - 247)	137 - 167 (1 4 - 1 7, 20 - 24)
	40 (104)	1,579 - 1,932 (16 1 - 19 7, 229 - 280)	157 - 196 (1 6 - 2 0, 23 - 28)

a. The pressure will change in the following manner with changes in conditions:
- When blower speed is low, discharge pressure will drop
- When the relative humidity of intake air is low, discharge pressure will drop

b. The temperature will change in the following manner with changes in conditions:
When the ambient air temperature is low, the outlet air temperature will become low.

PRECAUTIONS FOR REFRIGERANT CONNECTION

WARNING.

Gradually loosen discharge side hose fitting, and remove it after remaining pressure has been released

When replacing or cleaning refrigerant cycle components, observe the following

- Do not leave compressor on its side or upside down for more than 10 minutes, as compressor oil will enter low pressure chamber
- When connecting tubes, be sure to use a torque wrench

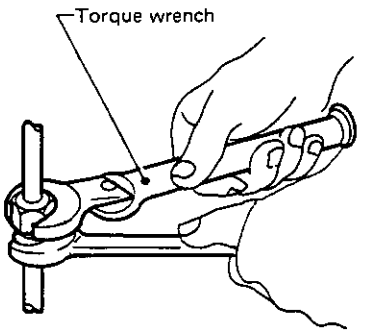

SHA896A

- After disconnecting tubes, plug all openings immediately to prevent entrance of dirt and moisture

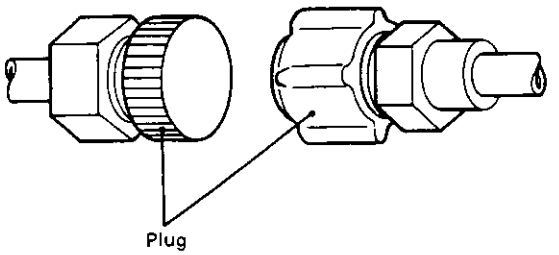

SHA058

- Do not reuse used O-ring
- When connecting tube, apply compressor oil to portions shown in illustration Be careful not to apply oil to threaded portion
- O-ring must be closely attached to inflated portion of tube

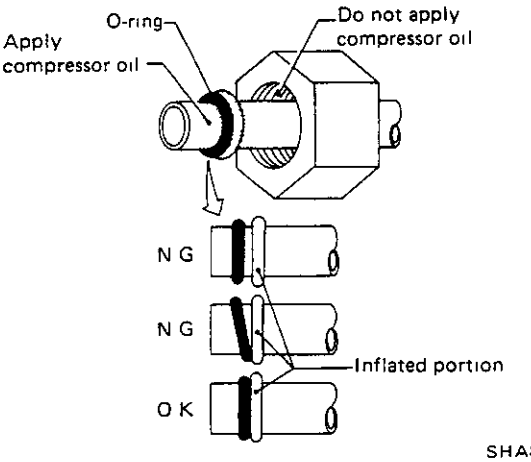

SHA897A

- After inserting tube into union until O-ring is no more visible, tighten nut to specified torque

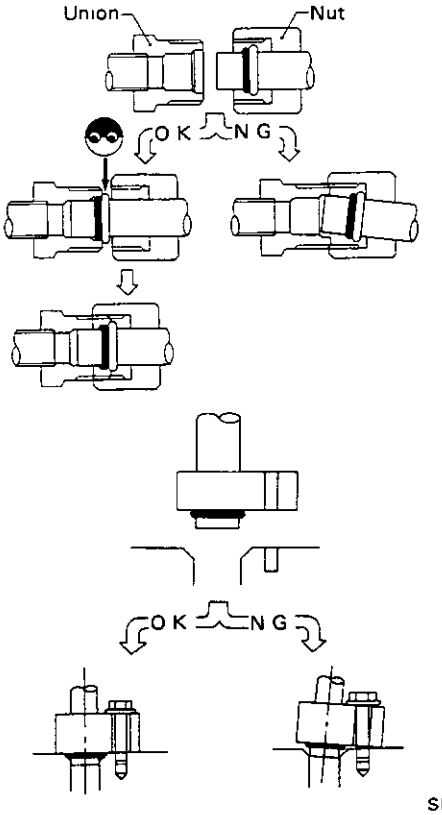

SHA898A

- After connecting line, conduct leak test and make sure that there is no leak from connections When the gas leaking point is found, disconnect that line and replace the O-ring Check fit for further use and then tighten connections to seal seat for the specified torque

PIPING, COMPRESSOR MOUNTING AND F.I.C.D.

Refrigerant Lines

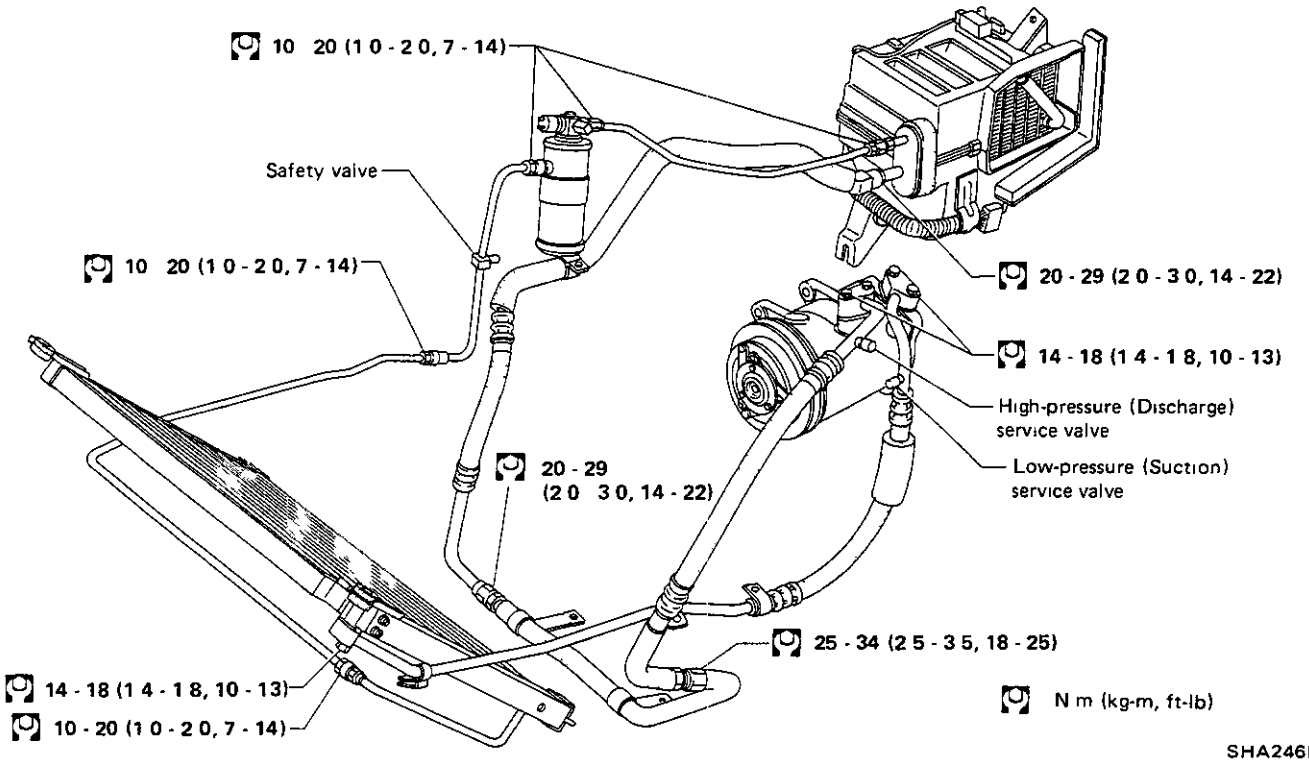

Compressor Mounting

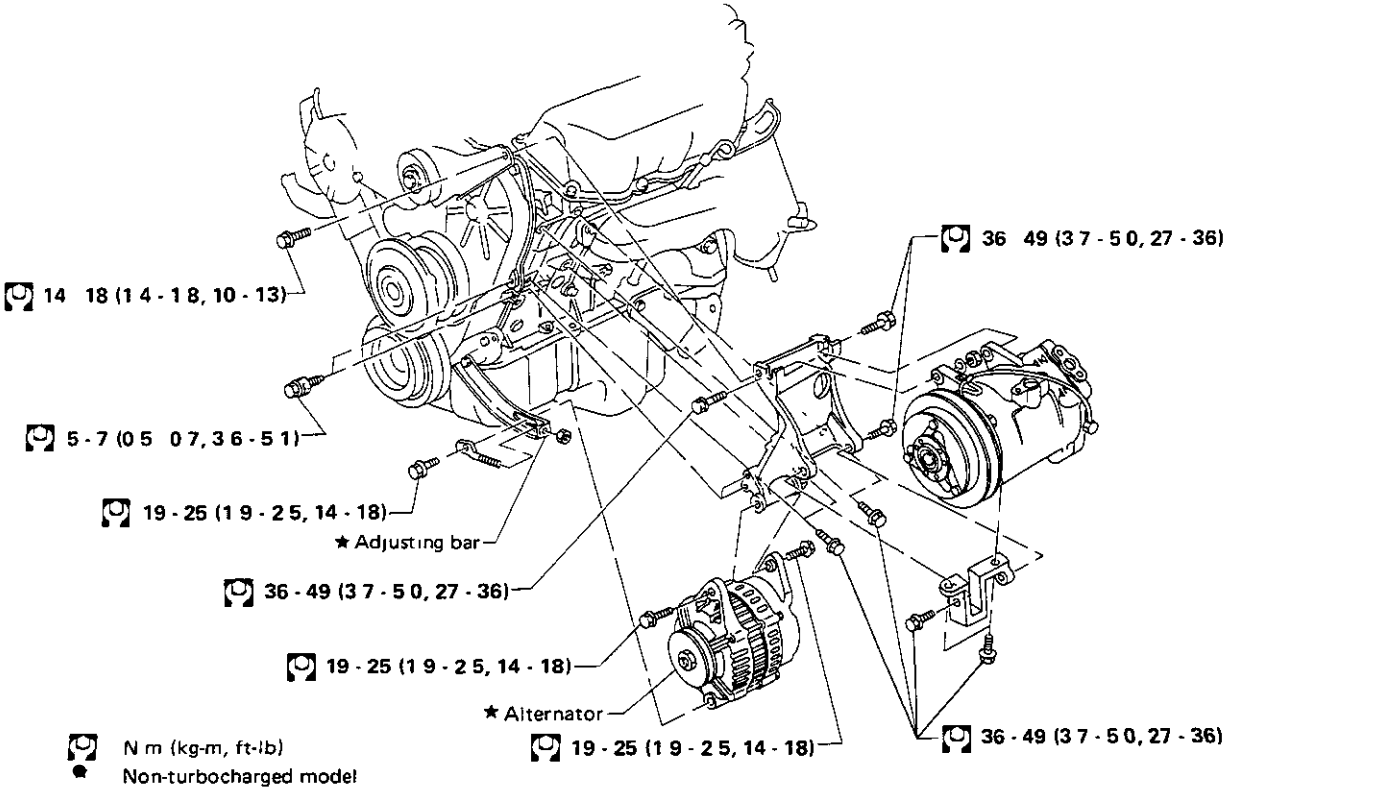

Idle Speed Adjusting and Checking

FAST IDLE CONTROL DEVICE (F.I.C.D)

1 *Run engine until it reaches operating temperature.*
2 With air conditioning system OFF (when compressor is not operating), make sure that engine *is at correct idle speed*
3 With air conditioning system ON (Recirculation switch at "RECIRC" position, fan control lever at "HI" position), make sure that compressor and F I C D *solenoid valve are functioning properly*
4 For non-turbocharged model, set idle speed at the specified value
For turbocharged model, make sure that idle speed is at the specified value **(Non-adjustable)**

Non-turbocharged model

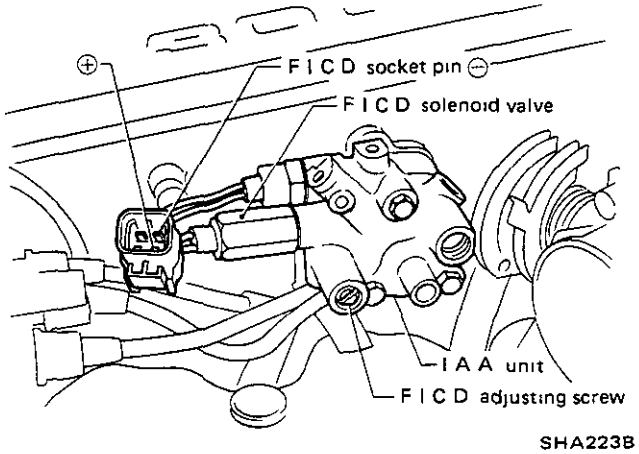

SHA223B

Turbocharged model

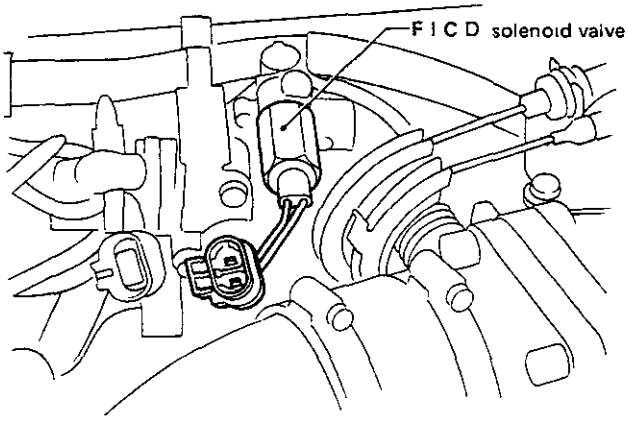

SHA248B

ENGINE IDLING SPEED

Transmission			Non-turbocharged model	Turbocharged model
When A/C is OFF				
	M/T	rpm	650 - 750	650 - 750
	A/T	rpm	650 - 750 at "D" range	600 - 700 at "D" range
When A/C is ON				
	M/T	rpm	750 - 850	750 - 850
	A/T	rpm	750 - 850 at "D" range	750 - 850 at "D" range

COMPRESSOR OIL—For MJS170

Checking and Adjusting

The oil used to lubricate the compressor is circulating with the refrigerant
Whenever replacing any component of the system of a large amount of gas leakage occurs, add oil to maintain the original amount of oil

Total amount of oil in the system:
150 mℓ (5.1 US fl oz, 5.3 Imp fl oz)

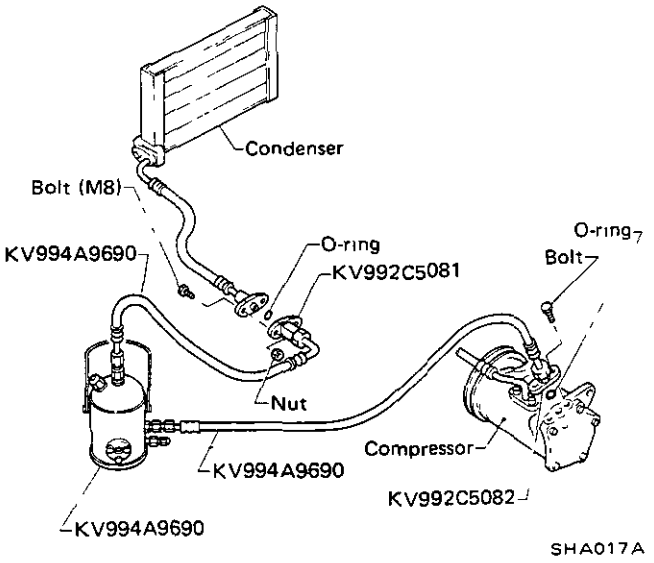

1 Connect oil separator KV994A9690 between compressor discharge side and condenser
2 Evacuate and charge the system
3 Operate compressor at engine idling with air conditioner set for maximum cooling and high fan speed
4 Stop compressor operation after 10 minutes

Never allow engine speed to exceed idling speed

CAUTION·

Do not continue compressor operation for more than 10 minutes

5 Disconnect oil separator and connect refrigerant line to original positions
6 Disconnect low flexible hose from compressor suction valve
7 Add new oil from compressor suction port

Amount of oil to be added:
120 mℓ (4.1 US fl oz, 4.2 Imp fl oz)

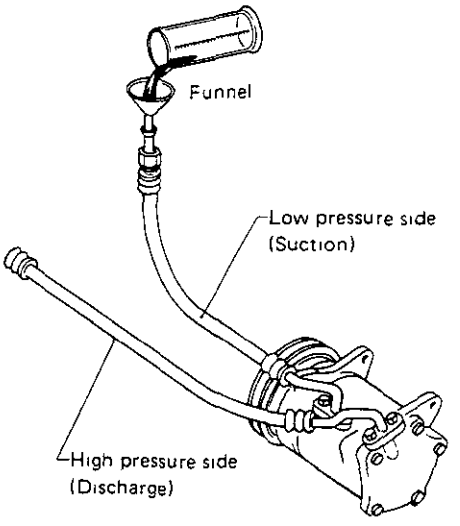

- **Oil remains unremoved in the system about 30 mℓ (1.0 US fl oz, 1 1 Imp fl oz).**

8 After adding oil, rotate compressor clutch by hand 5 to 10 turns
9 Connect refrigerant line and evacuate and charge system
10 Conduct leak test and performance test
11 Gradually loosen drain cap of oil separator to release residual pressure Remove cap and drain oil
12 To prevent formation of rust and intrusion of moisture or dust, perform the following before placing oil separator kit into storage
1) Cap each opening of flexible hose and double union securely
2) Cap oil separator, evacuate it from service valve, and charge refrigerant

COMPRESSOR OIL—For MJS170

Checking and Adjusting (Cont'd)

IF OIL SEPARATOR IS NOT AVAILABLE

Add oil in accordance with the table below

Condition		Amount of oil to be added mℓ (US fl oz, Imp fl oz)
Replacement of compressor		1 Remove all oil from new and old compressors * 2 Charge new compressor with the same amount of oil as was in the old compressor
Replacement of evaporator		80 (2 7, 2 8)
Replacement of receiver dryer (liquid tank)		Oil need not be added
Replacement of condenser	There is no sign of oil leakage from condenser	Oil need not be added
	There are evidences of a large amount of oil leakage from condenser	60 (2 0, 2 1)
Replacement of flexible hose or pipe	There is no sign of oil leakage	Oil need not be added
	There are evidences of a large amount of oil leakage	70 (2 4, 2 5)
Gas leakage	There is no sign of oil leakage	Oil need not be added
	There are evidences of a large amount of oil leakage	70 (2 4, 2 5)

* Remove compressor oil as follows

1. **With the compressor upside down, completely drain the oil through the suction port (from the embossed letter "s" mark side)**
2. **When the oil stops flowing out, rotate the clutch hub two or three times to completely drain the oil**

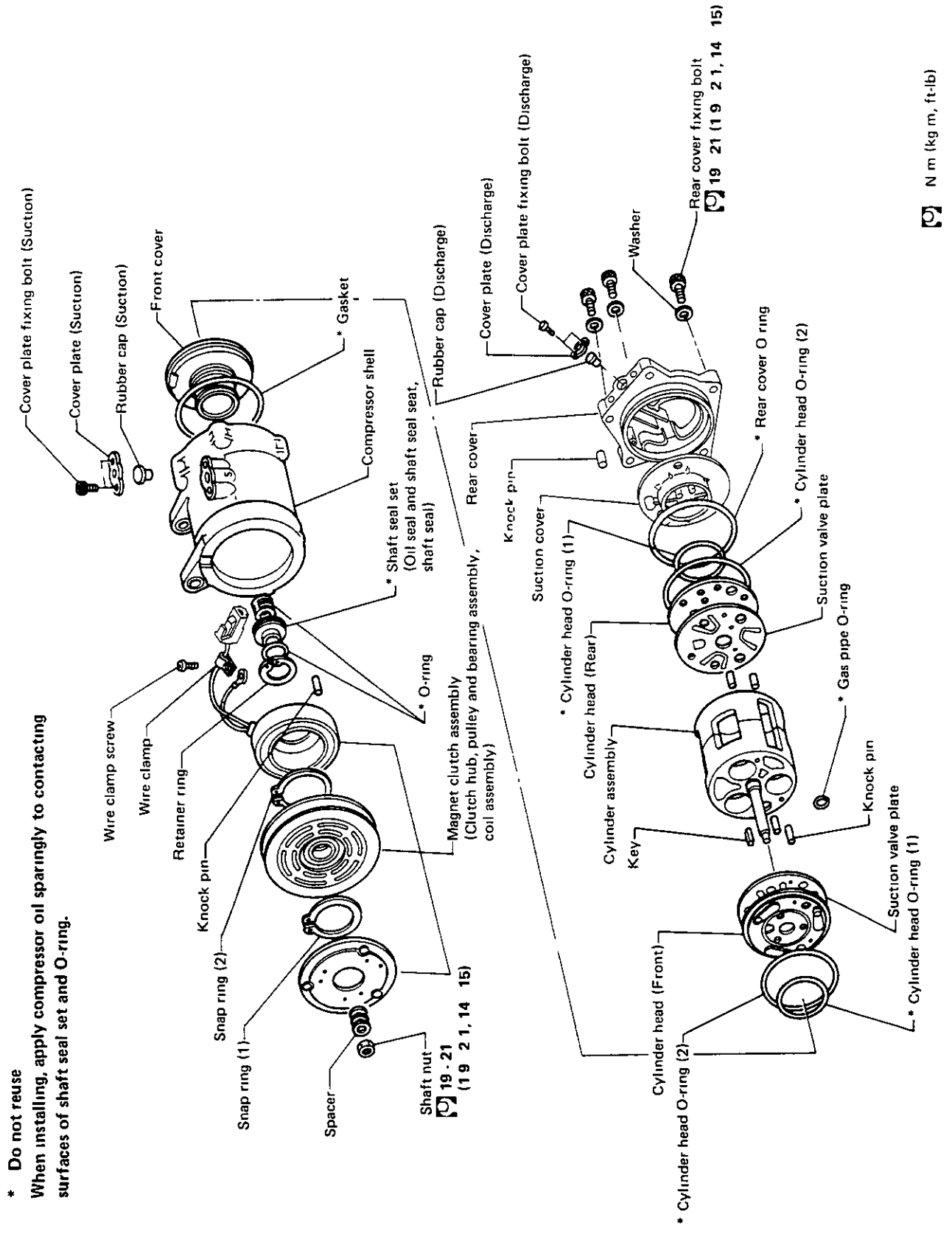

* Do not reuse
When installing, apply compressor oil sparingly to contacting surfaces of shaft seal set and O-ring.

SHA906A

Leak Test

EVACUATE AND CONDUCT LEAK TEST

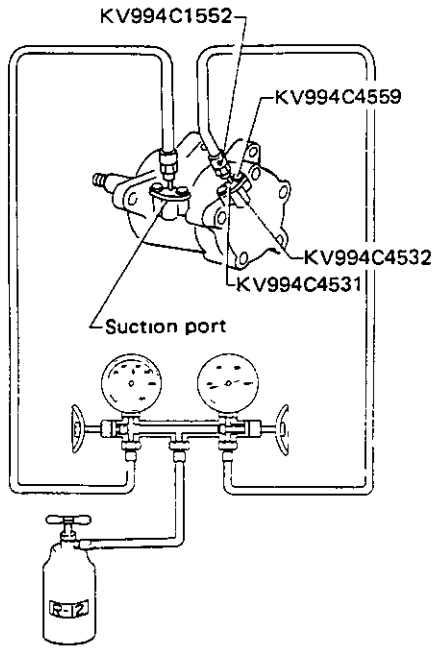

SHA907A

Clutch Replacement

- When removing shaft nut, hold clutch hub with Tool

  Tool No.: KV99412302 (J24878-1)

- Using Tool KV994C5780, clutch hub can be removed easily

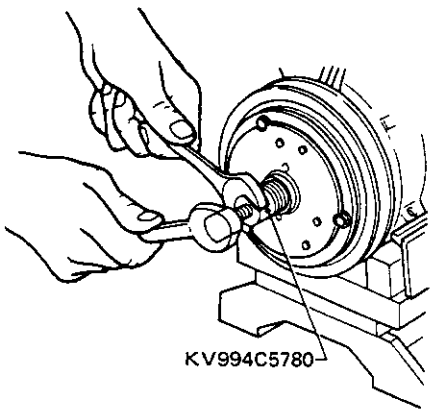

SHA268A

- When assembling clutch hub, adjust hub-to-pulley clearance with shims

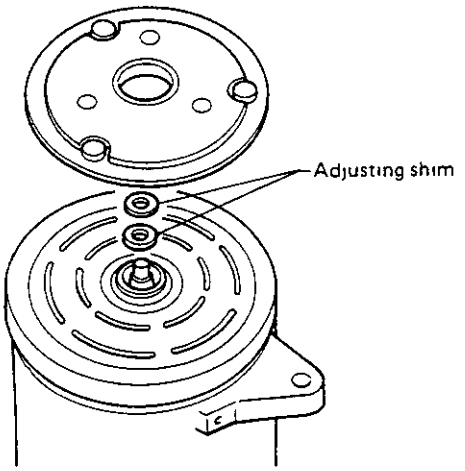

SHA272A

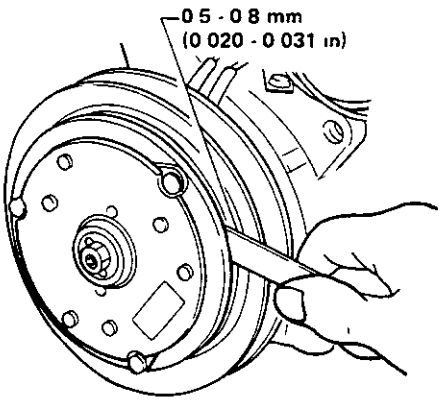

SHA908A

BREAK-IN OPERATION

When replacing compressor clutch assembly, do not forget break-in operation, accomplished by engaging and disengaging the clutch about thirty times Break-in operation raises the level of transmitted torque

Shaft Seal Replacement

- Before disassembling, be sure to measure the amount of oil
  After assembling, charge with the same amount of new oil

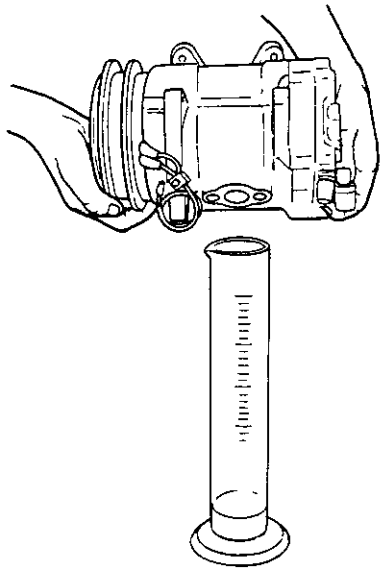

SHA033A

- When removing seal seat
  Apply pressure with refrigerant

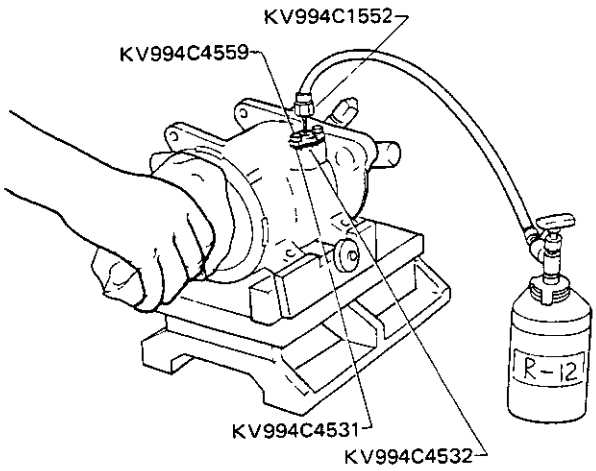

SHA274A

- With Tool KV994C1143, depress carbon seal and hook the case of shaft seal

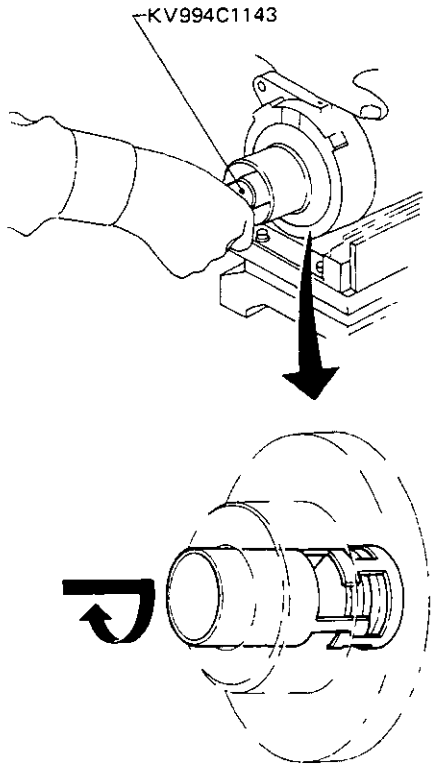

SHA275A

- When installing shaft seal

1) Cap Tool KV994C5784 to the top end of compressor shaft
2) Using Tool KV994C1143, insert shaft seal with shaft seal case and shaft cutout aligned
   Apply force to turn the seal somewhat to the left and right Insure that shaft seal seats properly in the shaft cutout

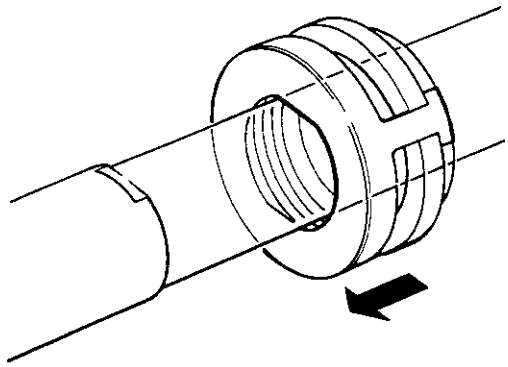

AC037

Valve Replacement

- Using Tool KV99412330, remove rear cover

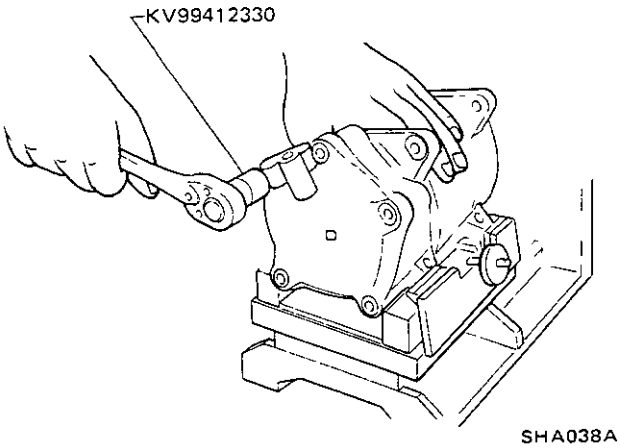

SHA038A

- Using Tool KV994C5785, remove rear cylinder head

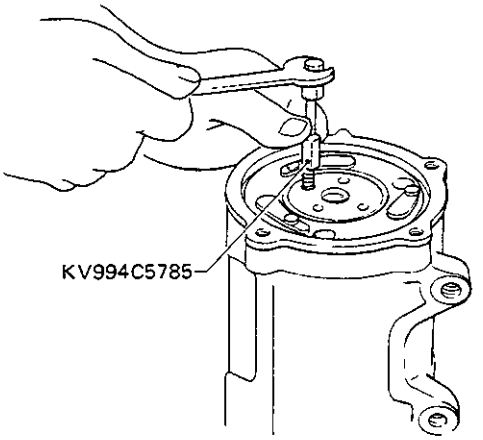

SHA909A

- When assembling

1) Front cover must be installed so that the cut-out portions of front cover and shell are aligned
   For this purpose, install front cover on cylinder head so that angle between threaded hole in front cover and low pressure side refrigerant passage in cylinder head is about 60°

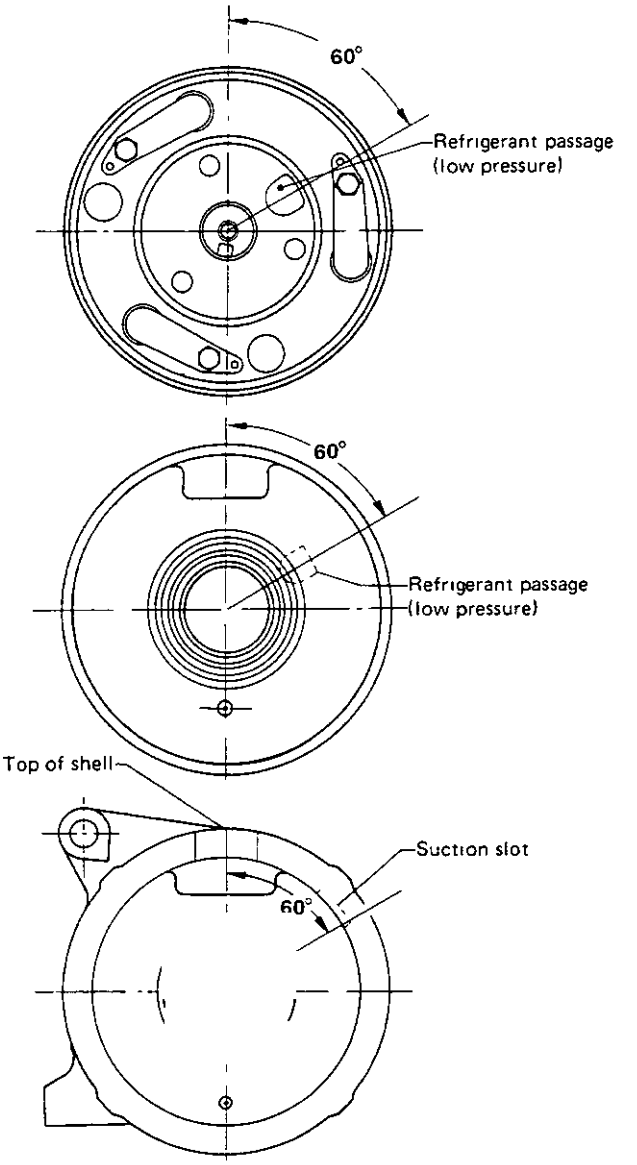

SHA276A

Valve Replacement (Cont'd)

2) When installing shell on cylinder, adjust position of shell so that suction inlet of shell opens in the same direction as suction slot of cylinder assembly Then, make sure swash plate is visible in suction inlet by removing suction valve

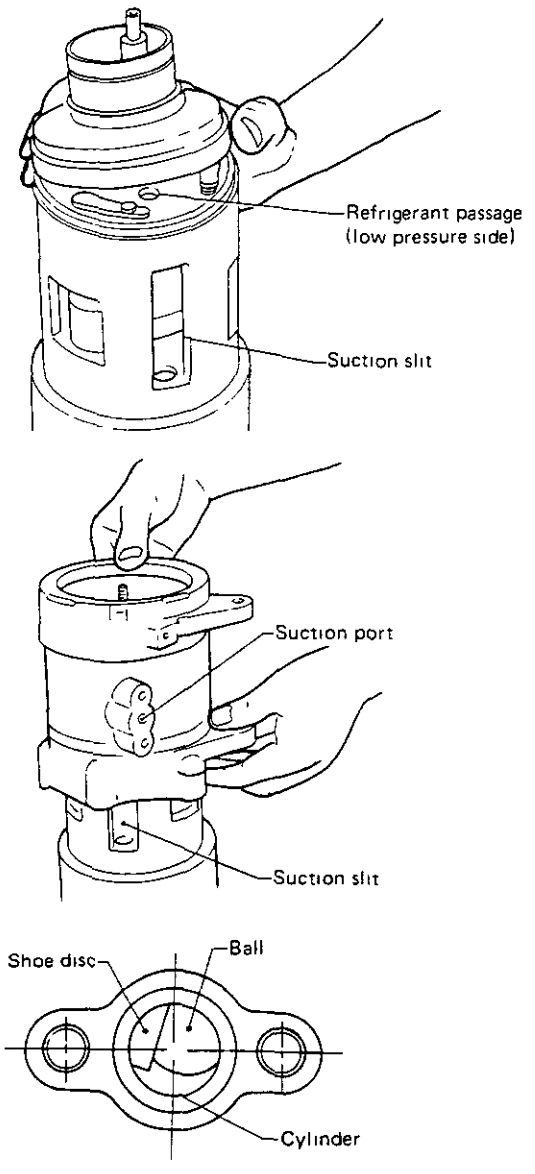

A/C ELECTRICAL CIRCUIT (Manual)

Schematic

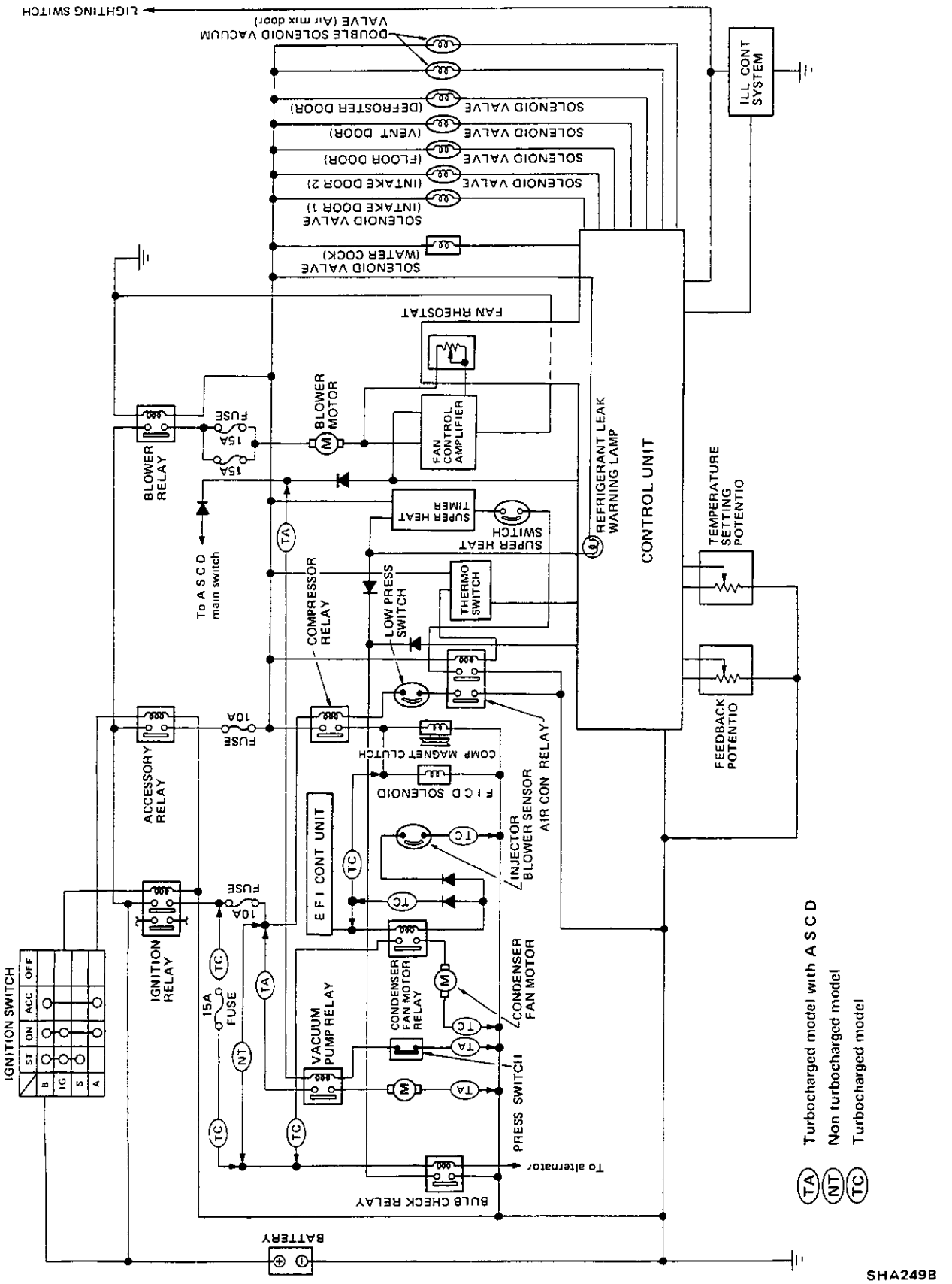

A/C ELECTRICAL CIRCUIT (Manual)

Wiring Diagram

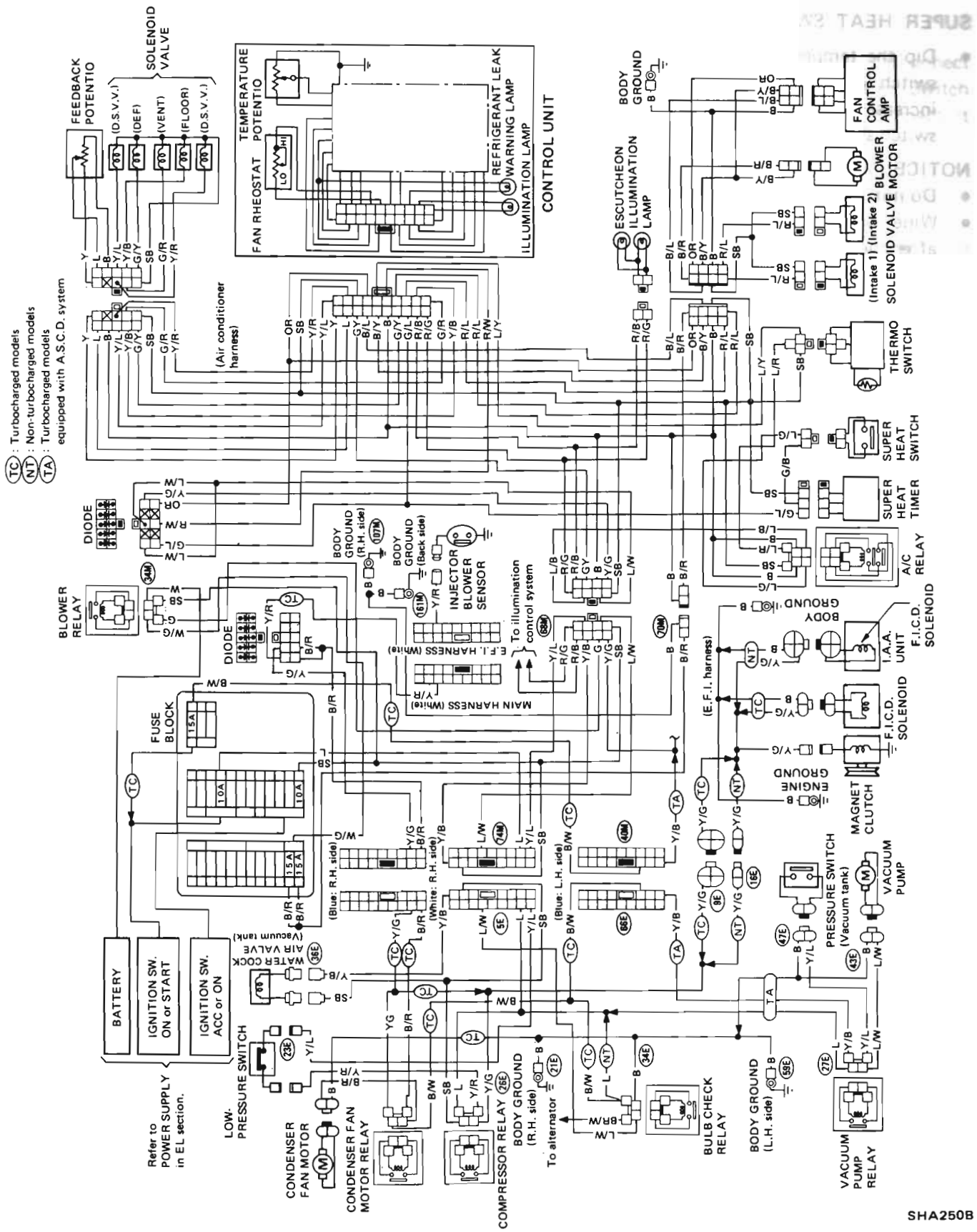

Inspection

SUPER HEAT SWITCH

- Dip the temperature sensor of the super heat switch in a container filled with cold water and increase the temperature of the water The switch should turn "ON"

NOTICE

- **Do not allow the switch to get into water.**
- **Wipe water from temperature sensor section after checking it**

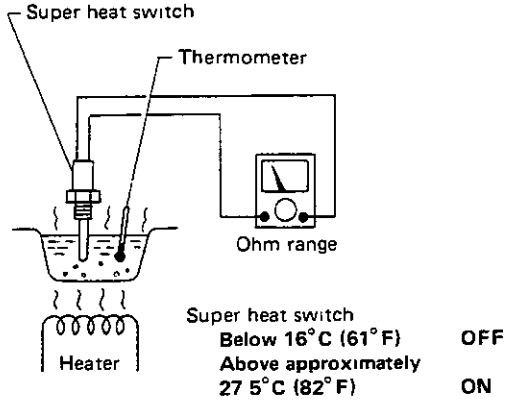

SHA251B

SUPER HEAT TIMER

- Make sure contacts of super heat timer close (continuity exists) after a constant current has passed through the timer for a certain period of time

Time while applying voltage (12V) to the terminals between ① and ② (Sec)	Resistance between ② and ③ (Ω)
Less than 105	∞
More than 175	Less than 400

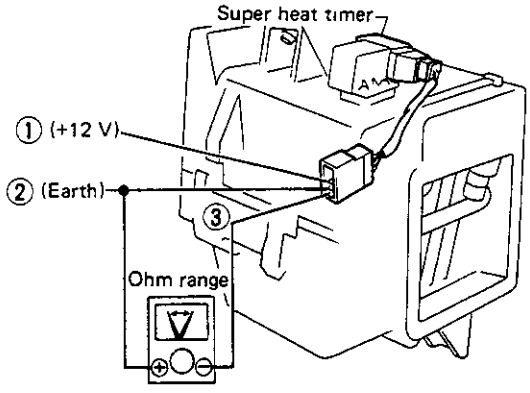

SHA252B

VACUUM TANK

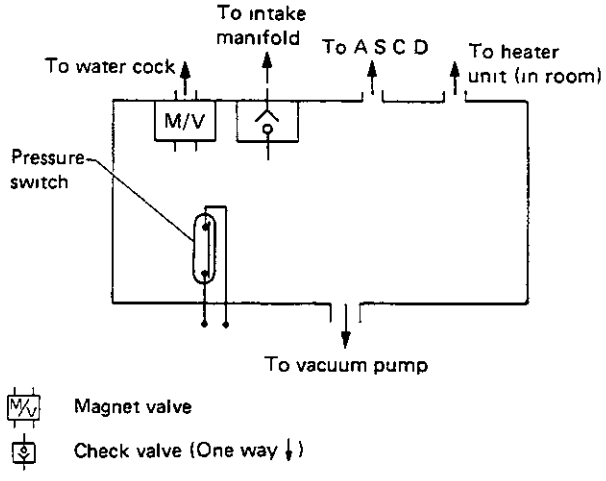

SHA253B

Solenoid valve check for water cock

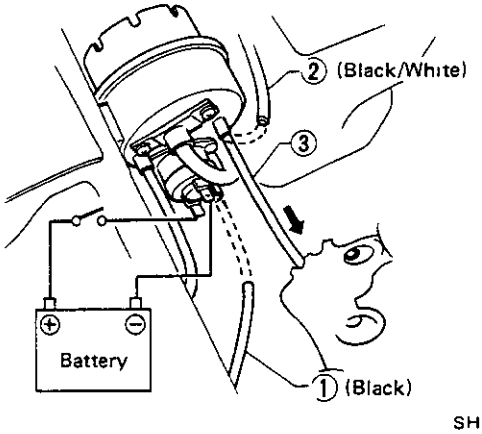

SHA254B

Inspection (Cont'd)

1 Disconnect vacuum hose ①
2 Disconnect vacuum hose ② and connect hose ③ instead Suck in through hose ③ to confirm that air does not flow through the hose and that check valve is closed
3 While sucking vacuum hose ③, change voltage to solenoid to check for open-close operation of solenoid valve

Applied voltage to solenoid (V)	Operation of solenoid valve
0	Close
12	Open

Pressure switch check for turbocharged model

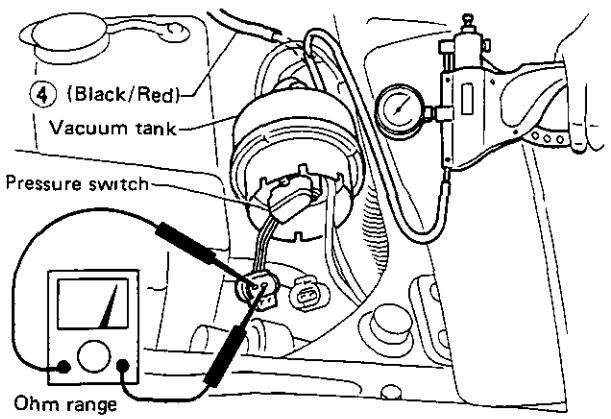

Pressure	Resistance (Ω)
Atmospheric pressure	0
Vacuum pressure more than 46 7 kPa (350 mmHg, 13 78 inHg)	∞

SHA255B

1. Disconnect vacuum hose ④ from the terminal and connect a vacuum handy pump with the same terminal
2. Check pressure switch using a vacuum handy pump.

VACUUM PUMP MOTOR

1 Turn ignition switch "OFF" Disconnect vacuum hose ④ (Refer to "Pressure Switch Check") from vacuum tank and connect it again
2 Make sure air conditioner switch is "OFF"
3 Turn ignition switch "ON" (Do not start the engine)
4 Push cruise control main switch to make sure vacuum pump starts. (A sound should be heard from the pump)
5 The vacuum pump is operating properly if it stops within 20 seconds after it has started
6 If it fails to stop within 20 seconds, and vacuum hoses are in good order, it is malfunctioning

SOLENOID VALVE

Perform operational check, referring to the "Table of operation of solenoid valve in Air Flow (page HA-3) and Wiring Diagram (page HA-8 or HA-31)

LOCATION OF A/C ELECTRICAL COMPONENTS

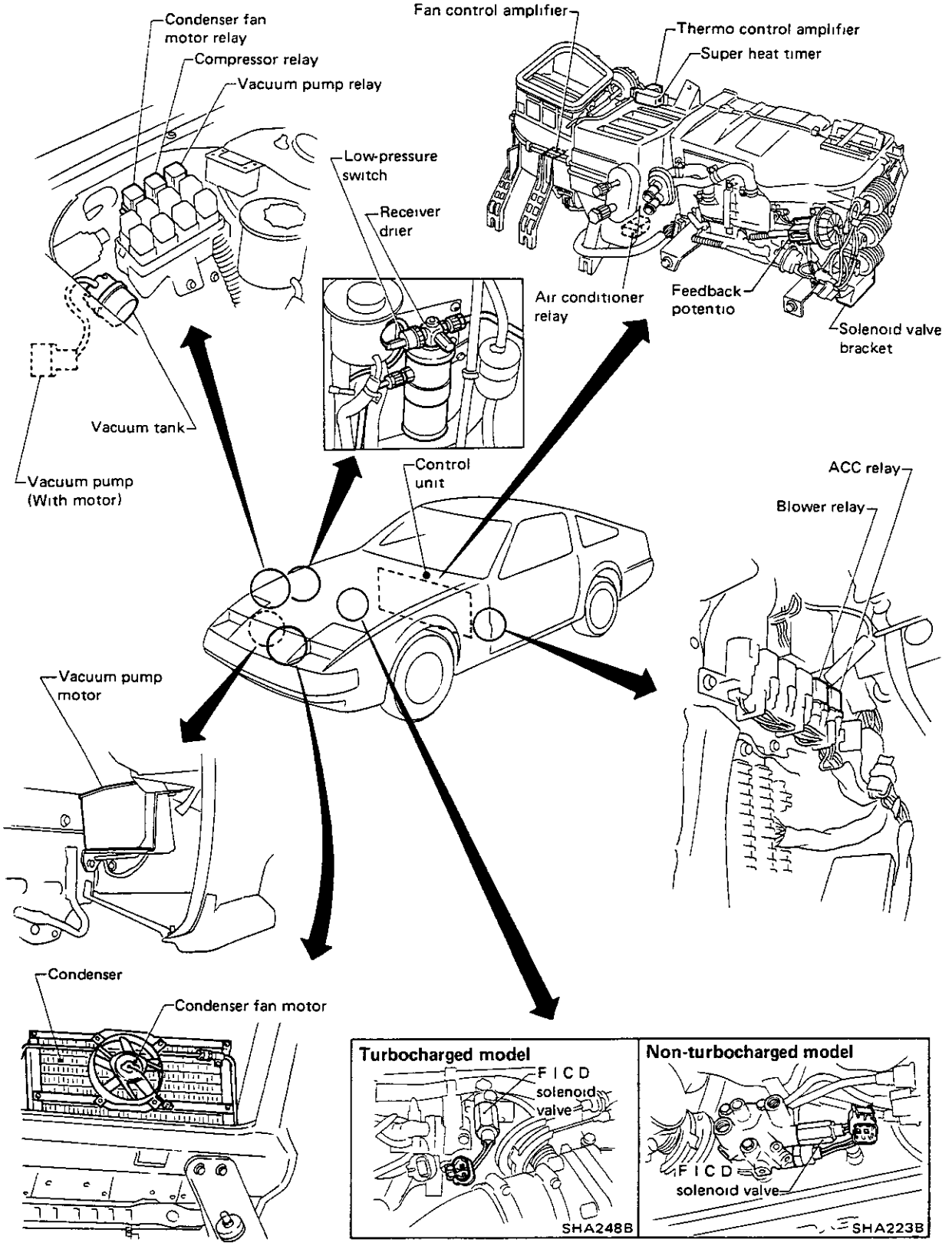

SHA256B

SERVICE DATA AND SPECIFICATIONS (S.D.S.)

General Specifications

COMPRESSOR

Model	MJS170
Type	Swash plate
Displacement cm³ (cu in)/rev	170 (10 37)
Cylinder bore x stroke mm (in)	40 0 x 22 6 (1 57 x 0 89)
Direction of rotation	Clockwise (viewed from drive end)
Type of driving belt	HA type (Cogged belt)

LUBRICATING OIL

Model	MJS170
Type	SUNISO 5GS
Capacity mℓ (US fl oz, Imp fl oz) Amount of oil in the system	150 (5 1, 5 3)
Residual oil level in the system (After oil return operation and draining oil)	120 (4 1, 4 2)

REFRIGERANT

Type	R-12
Capacity kg (lb)	0 9 - 1 1 (2 0 - 2 4)

ENGINE IDLING SPEED

Transmission			Non-turbocharged model	Turbocharged model
When A/C is OFF				
	M/T	rpm	650 750	650 - 750
	A/T	rpm	650 - 750 at "D" range	600 - 700 at "D" range
When A/C is ON				
	M/T	rpm	750 - 850	750 - 850
	A/T	rpm	750 - 850 at "D" range	750 - 850 at "D" range

Inspection and Adjustment

COMPRESSOR

Model	MJS170
Clutch hub to pulley clearance mm (in)	0 5 - 0 8 (0 020 - 0 031)

BELT TENSION

Type	Belt deflection [Applied pressure is 98 N (10 kg, 22 lb)] Used	New	Limit
All models mm (in)	9 0 - 11 0 (0 354 - 0 433)	7 0 - 9 0 (0 276 0 354)	16 (0 63)

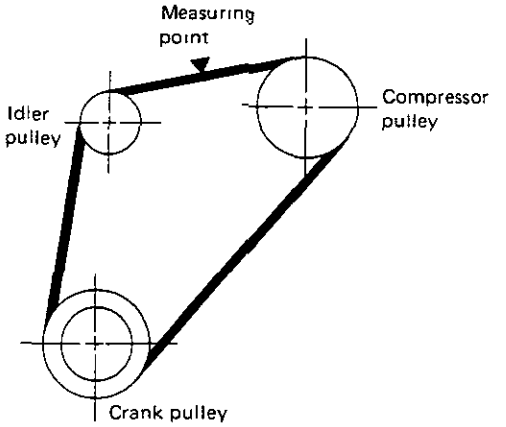

SHA252B

Tightening Torque

COMPRESSOR INSTALLATION

	N m	kg m	ft lb
Compressor bracket to cylinder block	30 40	3 1 - 4 1	22 30
Compressor to compressor bracket	30 40	3 1 4 1	22 30
Compressor shaft nut	19 21	1 9 - 2 1	14 15
Compressor rear cover fixing bolt	19 21	1 9 2 1	14 15

REFRIGERANT LINE

When connecting lines made of different material, basically use the lower tightening torque of the two

Union type (pipe to pipe)

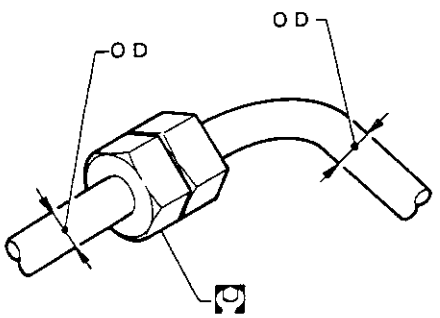

SHA669A

Pipe O D mm (in)	Material					
	Steel or copper			Aluminum		
	N m	kg m	ft lb	N m	kg-m	ft-lb
6 (1/4)	10 20	1 0 2 0	7 14	–	–	–
8 (5/16)	15 - 25	1 5 - 2 5	11 18	10 20	1 0 - 2 0	7 14
10 (3/8)	15 25	1 5 - 2 5	11 18	10 20	1 0 2 0	7 14
12 (1/2)	20 29	2 0 - 3 0	14 22	15 25	1 5 - 2 5	11 18
16 (5/8)	25 34	2 5 - 3 5	18 - 25	20 - 29	2 0 3 0	14 22
19 (3/4)	25 - 34	2 5 - 3 5	18 25	20 - 29	2 0 3 0	14 - 22

Union type (hose to hose)

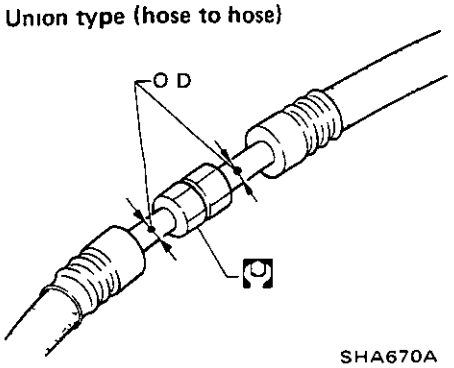

SHA670A

Pipe O D mm (in)	Material					
	Steel or copper			Aluminum		
	N m	kg-m	ft-lb	N m	kg m	ft-lb
6 (1/4)	10 - 20	1 0 - 2 0	7 - 14	–	–	–
8 (5/16)	15 - 25	1 5 - 2 5	11 - 18	10 - 20	1 0 2 0	7 14
10 (3/8)	15 25	1 5 - 2 5	11 - 18	10 - 20	1 0 2 0	7 14
12 (1/2)	25 34	2 5- 3 5	18 - 25	20 - 29	2 0 3 0	14 22
16 (5/8)	25 - 34	2 5 - 3 5	18 - 25	20 29	2 0 - 3 0	14 - 22

Tightening Torque (Cont'd)

Union type (hose to pipe)

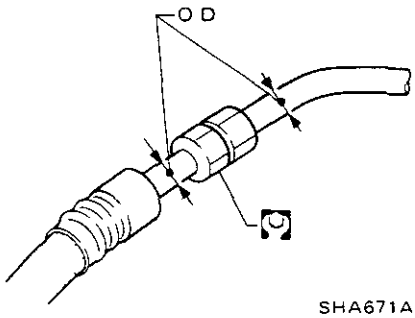

- Use tightening torque for flexible hose

Plate type

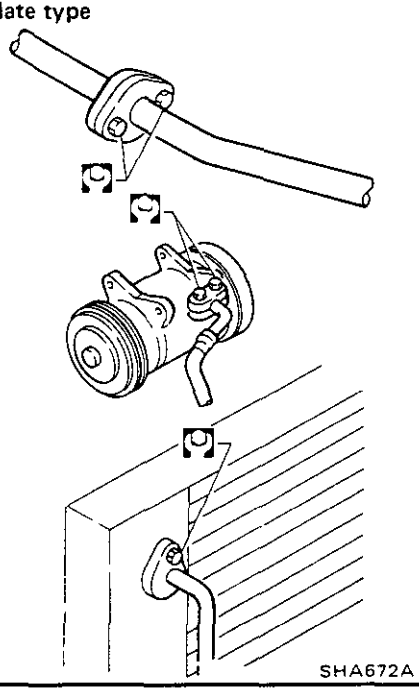

Bolt type				Tightening torque		
Grade	Nominal size	Bolt diameter mm (in)	Pitch mm (in)	N m	kg-m	ft-lb
4T	M6	6 0 (0 236)	1 0 (0 039)	3 - 4	0 3 - 0 4	2.2 2 9
	M8	8 0 (0 315)	1 25 (0 0492)	8 - 11	0 8 - 1 1	5 8 8 0
	M10	10 0 (0 394)	1 5 (0 059)	16 22	1 6 2 2	12 16
7T	M6	6 0 (0 236)	1 0 (0 039)	6 - 7	0 6 0 7	4 3 - 5 1
	M8	8 0 (0 315)	1 25 (0 0492)	14 18	1 4 - 1 8	10 13
	M10	10 0 (0 394)	1 5 (0 059)	25 35	2 6 - 3 6	19 - 26

SPECIAL SERVICE TOOLS

* Special tool or a commercial equivalent

Tool number (Kent-Moore No) Tool name	Tool
KV99412302 (J24878-1)* Clutch hub wrench	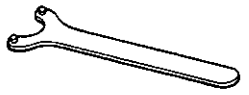
KV994C5780 (–) Clutch hub puller	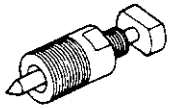
KV994C1143 (–) Shaft seal remover and installer	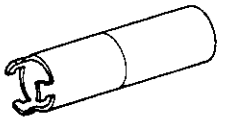
KV994C5784 (–)* Shaft seal pilot	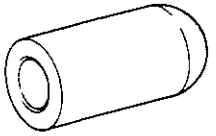
KV99412330 (–)* Allen socket	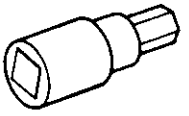
KV994C5785 (–)* Cylinder head remover	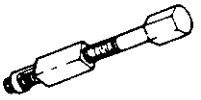
KV994A9690 (–) Oil separator kit	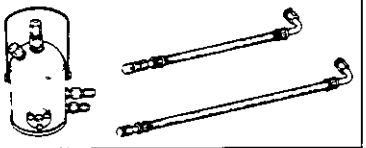
KV992C5079 (–) ① KV992C5081 (–) Adapter connector A ② KV992C5082 (–) Adapter connector B	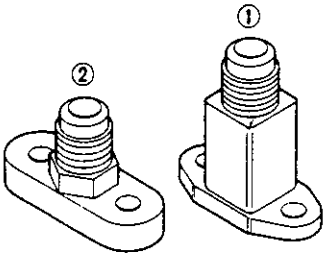
KV994C1552 (–) Charge nozzle	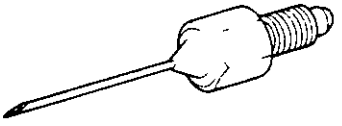

Tool number (Kent-Moore No) Tool name	Tool
KV994C4548 (–) Blind cover set ① KV994C4531 (–) Blind cover ② KV994C4532 (–) Gasket ③ KV994C4533 (–) Gasket (Useless) ④ KV994C4534 (–) Gasket (Useless) ⑤ KV994C4559 (–) Bolt	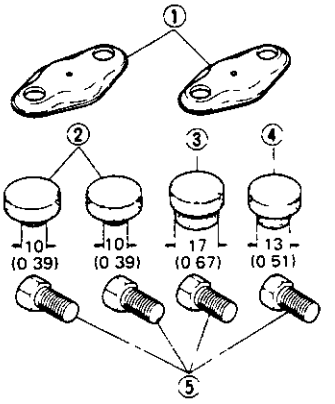 Unit mm (in)